Anritsu

SERVICE MANUAL

DIGITAL TRANSMISSION ANALYZER

ME3401A

SERVICE MANUAL

DIGITAL TRANSMISSION ANALYZER

ME3401A

MAR.
1993

Applicable Serial Nos.
start from M38187(TX)M42687(RX)
APR.1992 Ver.III

CERTIFICATION

ANRITSU CORPORATION certifies that this instrument has been thoroughly tested and inspected, and found to meet published specifications prior to shipping.
Anritsu further certifies that its calibration measurements are based on the Japanese Electrotechnical Laboratory and Radio Research Laboratory standards.

WARRANTY

All parts of this product are warranted by Anritsu Corporation of Japan against defects in material or workmanship for a period of one year from the date of delivery. In the event of a defect occurring during the warranty period, Anritsu Corporation will repair or replace this product within a reasonable period of time after notification, free-of-charge, provided that: it is returned to Anritsu; has not been misused; has not been damaged by an act of God; and that the user has followed the instructions in the operation manual.

Any unauthorized modification, repair, or attempt to repair, will render this warranty void.

This warranty is effective only for the original purchaser of this product and is not transferable if it is resold.

ALL OTHER EXPRESSED WARRANTIES ARE DISCLAIMED AND ALL IMPLIED WARRANTIES FOR THIS PRODUCT, INCLUDING THE WARRANTIES OF MERCHANTABILITY AND FITNESS FOR A PARTICULAR PURPOSE, ARE LIMITED IN DURATION TO A PERIOD OF ONE YEAR FROM THE DATE OF DELIVERY. IN NO EVENT SHALL ANRITSU CORPORATION BE LIABLE TO THE CUSTOMER FOR ANY DAMAGES, INCLUDING LOST PROFITS, OR OTHER INCIDENTAL OR CONSEQUENTIAL DAMAGES, ARISING OUT OF THE USE OR INABILITY TO USE THIS PRODUCT.

All requests for repair or replacement under this warranty must be made as soon as possible after the defect has been noticed and must be directed to Anritsu Corporation or its representative in your area.

Copyright © 1989 by ANRITSU CORPORATION Printed in Japan.
All rights reserved. No part of this manual may be reproduced in any form without written permission of ANRITSU CORPORATION.

WARNING

NO OPERATOR SERVICEABLE PARTS INSIDE.
REFER SERVICING TO QUALIFIED PERSONNEL.

CAUTION

FOR CONTINUED FIRE PROTECTION REPLACE
ONLY WITH SPECIFIED TYPE AND RATED FUSE.

Note:

Ac line power supply voltage rating change

The ME3401A is provided with a power transformer with several taps so that a nominal ac line voltage specified from 100 to 240 Vac can be used.

When changing the nominal ac line voltage rating, change the wiring of the appropriate primary taps of the power transformer in accordance with Fig. 1.

Nominal Line Voltage	85 - 130 Vac
100 V System	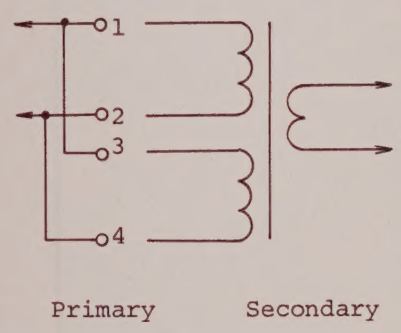
Nominal Line Voltage	200 - 240 Vac
200 V System	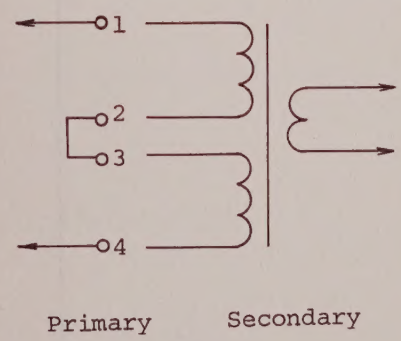

Fig. 1 Power Transformer Tap Connection

HISTORY OF MODIFICATIONS
(ME3401A Ser.)

NOV. 11 '92

ITEM	DESCRIPTION		Applicable Serial No.
	Before Modification	After Modification	
P.3-171/ 3-172	A1 ERROR DET Circuit Diagram (Receiver) (43W36040 2/5) C51 20P C79 0.5P	 C51 0.5P C79 11 to 30	
P.4-18	Parts List: A1 ERROR DET (RECEIVER)(44W88390 1/13,2/13) C51 CER,(CC45CH1H200JY) 20pF,±5%,50V C79 CER,(CC45CK1H05RCY) 0.5pF,±0.25pF, 50V	 C51 CER,(CC45CK1H05RCY) 0.5pF,±0.25pF,50V C79 CER,(CC45CH1H110-300JY) 11 to 30oF,±5%,50V Note: *18pF	From T:MT42995 R:MT48195

(Blank)

TABLE OF CONTENTS

		Page
SECTION 1	GENERAL	1-1
SECTION 2	MECHANICAL CONFIGURATION	
2.1	Introduction	2-1
2.2	Disassembly	2-1
2.2.1	Cabinet disassembly	2-1
2.2.2	Transmitter exploded view	2-5
2.2.3	Receiver exploded view	2-13
2.2.4	Printer option 11 exploded view	2-21
SECTION 3	TROUBLESHOOTING AND ADJUSTMENTS	
3.1	Introduction	3-1
3.2	Checking and Replacing Parts, and Changing AC Power Supply Rating	3-2
3.2.1	Explanation of PC board identification markings	3-2
3.2.2	Notes on soldering	3-3
3.2.3	Transistor check	3-4
3.3	Equipment Required for Trobleshooting and Adjustment	3-5
3.4	Circuit Reference	3-7
3.5	Transmitter Troubleshooting and Adjustment	3-9
3.5.1	Overall troubleshooting 1	3-9
3.5.2	A2 T-CONTROL PC board 2	3-15

TABLE OF CONTENTS

		Page
3.5.3	A1 PATTERN GENERATOR PC Board 3	3-29
3.5.4	A3 T-DISPLAY PC board 4	3-75
3.5.5	A4 JITTER MODULATION PC board 5 (OPT 01)	3-83
3.5.6	A5 MODULATION SIGNAL GENERATOR 6	3-99
3.5.7	A6-T SWITCH PC Board 7, A7 GP-IB PC Board 8 and A8 RS-232C PC Board 9	3-107
3.6	Receiver Troubleshooting and Adjustment	3-115
3.6.1	Overall troubleshooting 10	3-115
3.6.2	A2 R-CONTROL PC board 11	3-121
3.6.3	A1 ERROR DET PC board 12	3-139
3.6.4	A3 R-DISPLAY PC board 13	3-179
3.6.5	JITTER MEASUREMENT PC board 14	3-189
3.6.6	A4 R-SWITCH PC board 15, A8 PRINTER UNIT 16, PRINTER INTERFACE 17, PRINTER CONTROL 18 and A9 DS-1 OUTPUT 19	3-207

TABLE OF CONTENTS

		Page
SECTION 4	REPLACEABLE PARTS	
4.1	Introduction	4-1
4.2	Ordering information	4-1
4.3	Circuit Reference and Abbreviations used in the Parts List	4-2
4.4	Reading Capacitance and Resistance	4-4
4.5	Parts List	4-6

SECTION 1

GENERAL

This is the service manual for the ME3401A DIGITAL TRANSMISSION ANALYZER. It contains the following sections.

SECTION 2 MECHANICAL CONFIGURATION

This section describes how the various PC board are laid out.

SECTION 3 TROUBLESHOOTING AND ADJUSTMENT

This section describes how to troubleshoot the equipment. Circuit diagrams for the ME3401A are given in this section.

SECTION 4 REPLACEABLE PARTS

This section explains how to order replacement parts from the parts list.

For the specifications, operating instructions, performance check, and a detailed description of the ME3401A panel controls, refer to the separate operation manual.

SECTION 2

MECHANICAL CONFIGURATION

2.1 Introduction

This section explains how to disassemble the ME3401A.

2.2 Disassembly

2.2.1 Cabinet disassembly

Table 2-1 Mechanical Parts List

No.	Parts No.	Description	Remarks	Qty.
Fig. 2-1 (1)	422B13763B 43B35817 43B35818A,B	Cover	For receiver	1 set
(2)	422B13763A 43B35817 43B35818A,B	Cover	For transmitter	1 set
(3)	33E28694B	Cord winder		4
(4)	349B73661	Side handle		1
(5)	34E84192	Side foot		4
(6)	322B7672	Standard foot		4
(7)	349B73667	Stacking foot	Opt - 61	4
(8)	43H35813A 43H35813B	Foot pad	Opt - 61	1 1
(9)	3NPS12B3+SW+WB	Screw		4

Table 2-1 Mechanical Parts List (Cont'd)

No.		Parts No.	Description	Remarks	Qty.
Fig. 2-1	10	5FPS30S7	Screw		1
	11	5FPS16S7	Screw		1
	12	4NPS16B3+SW+WB	Screw		8
	13	3NPS10B3+SW+WB	Screw		4
	14	5BPS25S3+WB	Screw		1
	15	5BPS12S3+WB	Screw		1
	16	4NPS10S7+SW	Screw	Opt - 61	4

1. Remove the eight screws (9), (10), (11), (14) and (15) in Fig. 2-1 and lift off the cover (1). (For Receiver)

2. Remove the eight screws (9), (10), (11), (14) and (15) or twelve screws (9), (10), (11), (14), (15) and (16) (for OPT 61) and lift off the cover (2).

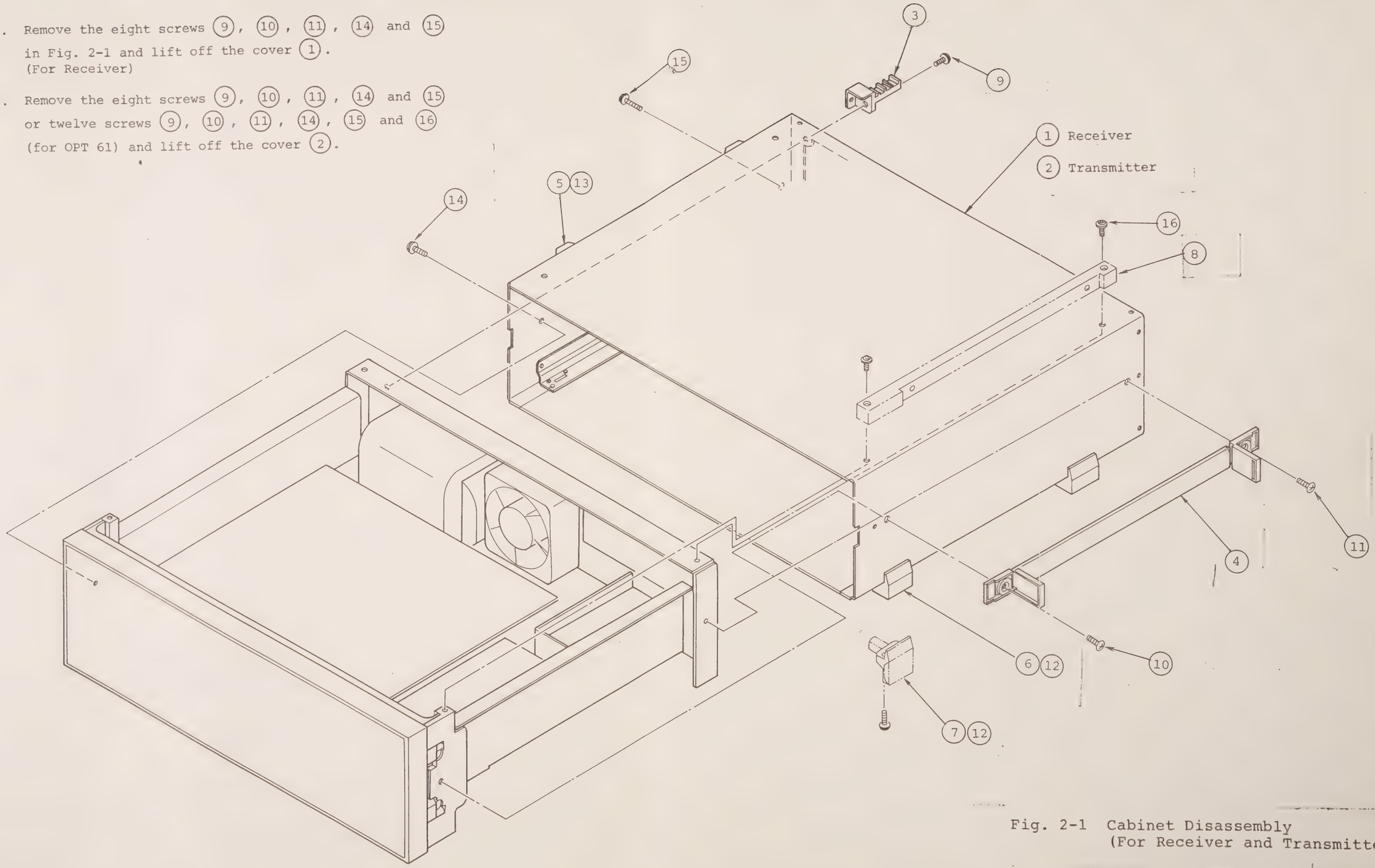

Fig. 2-1 Cabinet Disassembly
(For Receiver and Transmitter)

2.2.2 Transmitter exploded view

Table 2-2 Mechanical Parts List

No.	Parts No.	Description	Remarks	Qty.
Fig. 2-2 (1)	44Y91104A	Front panel		1 set
(2)	43H37160	Bracket		2
(3)	44E68583	Button		1
(4)	422U13834	A2 PC board		1
(5)	432U36046	A5 PC board		1
(6)	442U91223	A6 PC board		1
(7)	3FPS10B3	Screw		3
(8)	3NPS12B3+SW+WB	Screw		4
(9)	3NPS6B3+SW	Screw		18

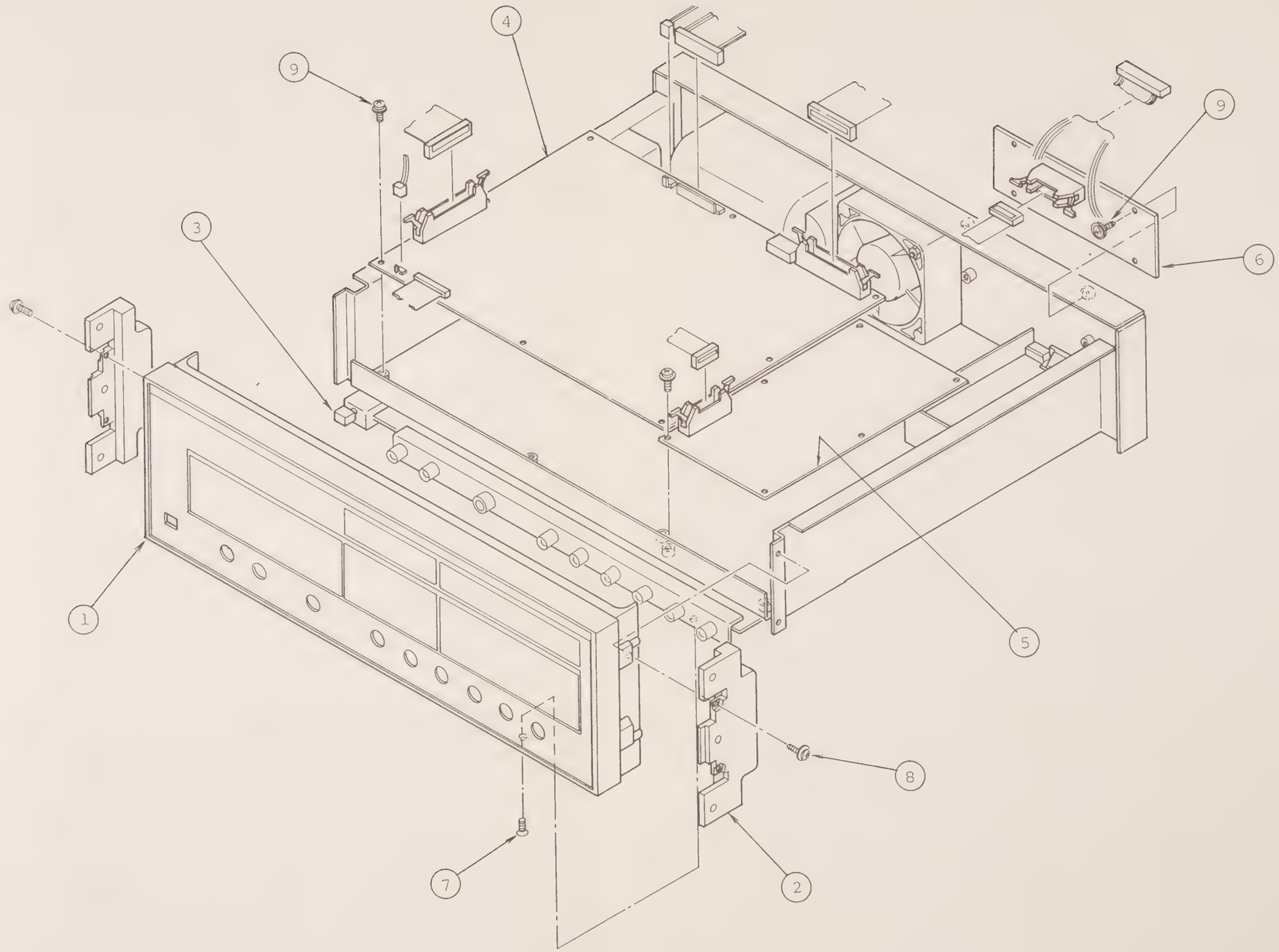

Fig. 2-2 Transmitter Exploded View (Front Panel)

Table 2-3 Mechanical Parts List

No.		Parts No.	Description	Remarks	Qty.
Fig. 2-3	1		Rear panel		1
	2	422U13911	A4 PC board		1
	3	422U13832	A1 PC board		1
	4	44Y88128	GP-IB interface	OPT - 41	1
	5	34B64690C	Protective mesh cover		1
	6				
	7	3BPS8S3+WB	Screw		4
	8	3NPS8B3+SW+WB	Screw		4
	9	3FPS6B3	Screw		4
	10	3NPS6B3+SW	Screw		16
	11	3FPS10B3	Screw		4

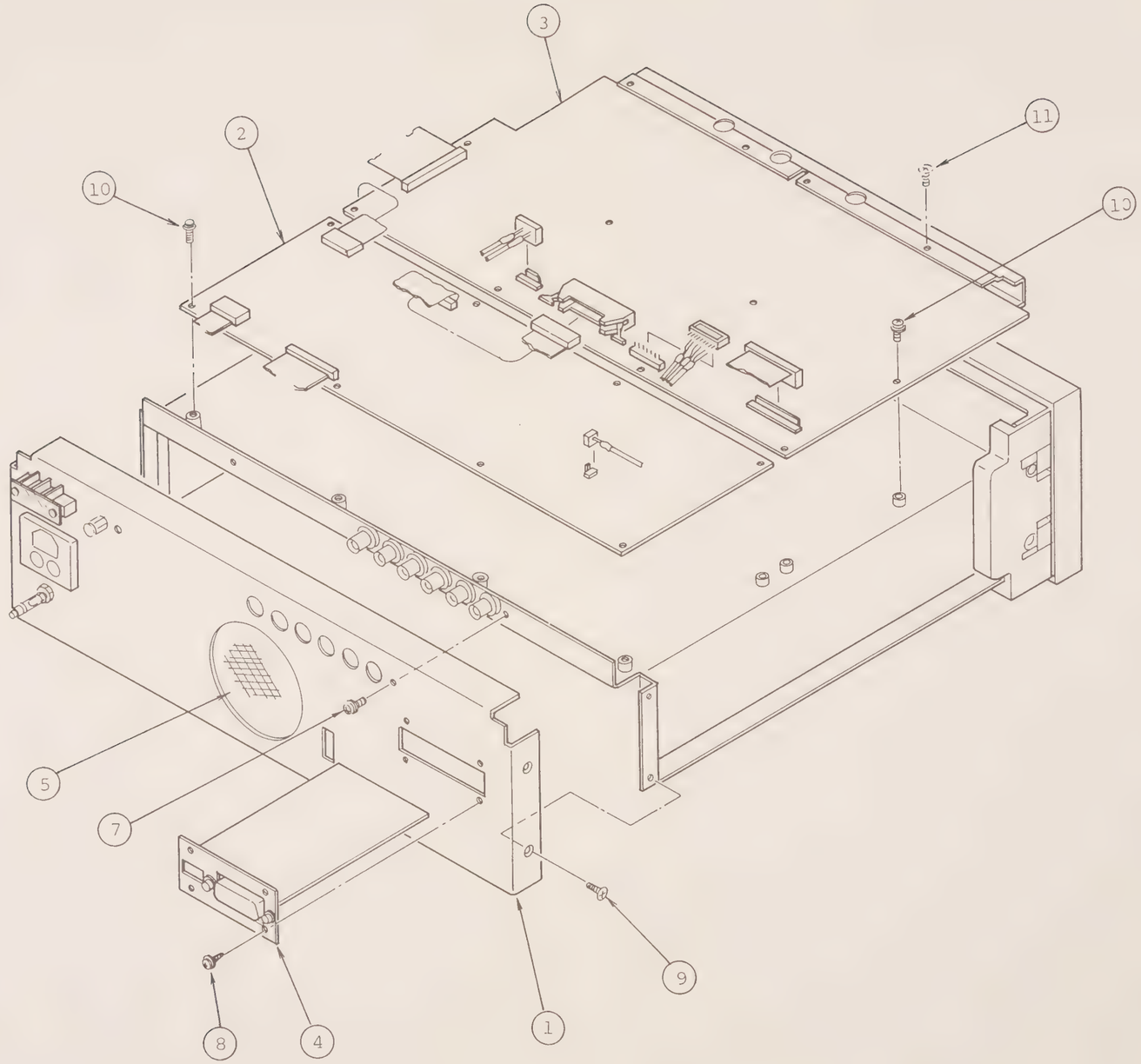

Fig. 2-3 Transmitter Exploded View (Rear Panel)

2.2.3 Receiver exploded view

Table 2-4 Mechanical Parts List

No.	Parts No.	Description	Remarks	Qty.
Fig. 2-4 (1)	44Y91104B	Front panel		1 set
(2)	43H37160	Bracket		2
(3)	44E68583	Button		1
(4)	422U14527	A2 PC board		1
(5)	442U88382	A4 PC board		1
(6)	3FPS10B3	Screw		2
(7)	3NPS12B3+SW+WB	Screw		4
(8)	3NPS6B3+SW	Screw		14

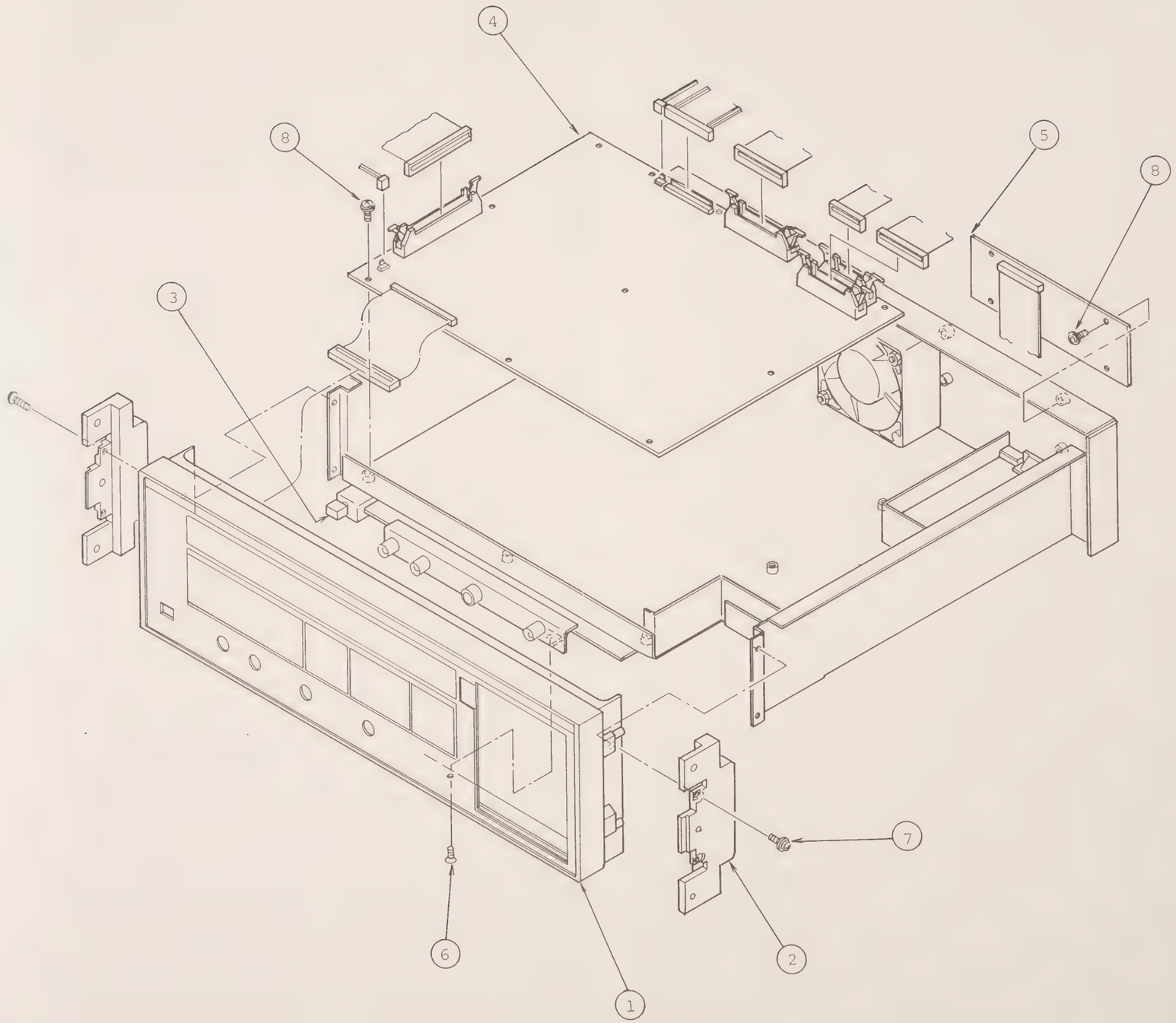

Fig. 2-4 Receiver Exploded View (Front Panel)

Table 2-5 Mechanical Parts List

No.	Parts No.	Description	Remarks	Qty.
Fig. 2-5 (1)	422B13759	Rear panel		1
(2)	422U13913	A5 PC board		1
(3)	422U13838	A1 PC board		1
(4)	44Y88128	GP-IB interface	OPT - 42	1
(5)	34B64690C	Protective mesh cover		1
(6)				
(7)	3BPS8S3+WB	Screw		4
(8)	3NPS8B3+SW+WB	Screw		4
(9)	3FPS6B3	Screw		4
(10)	3NPS6B3+SW	Screw		14
(11)	3FPS10B3	Screw		2
(12)				

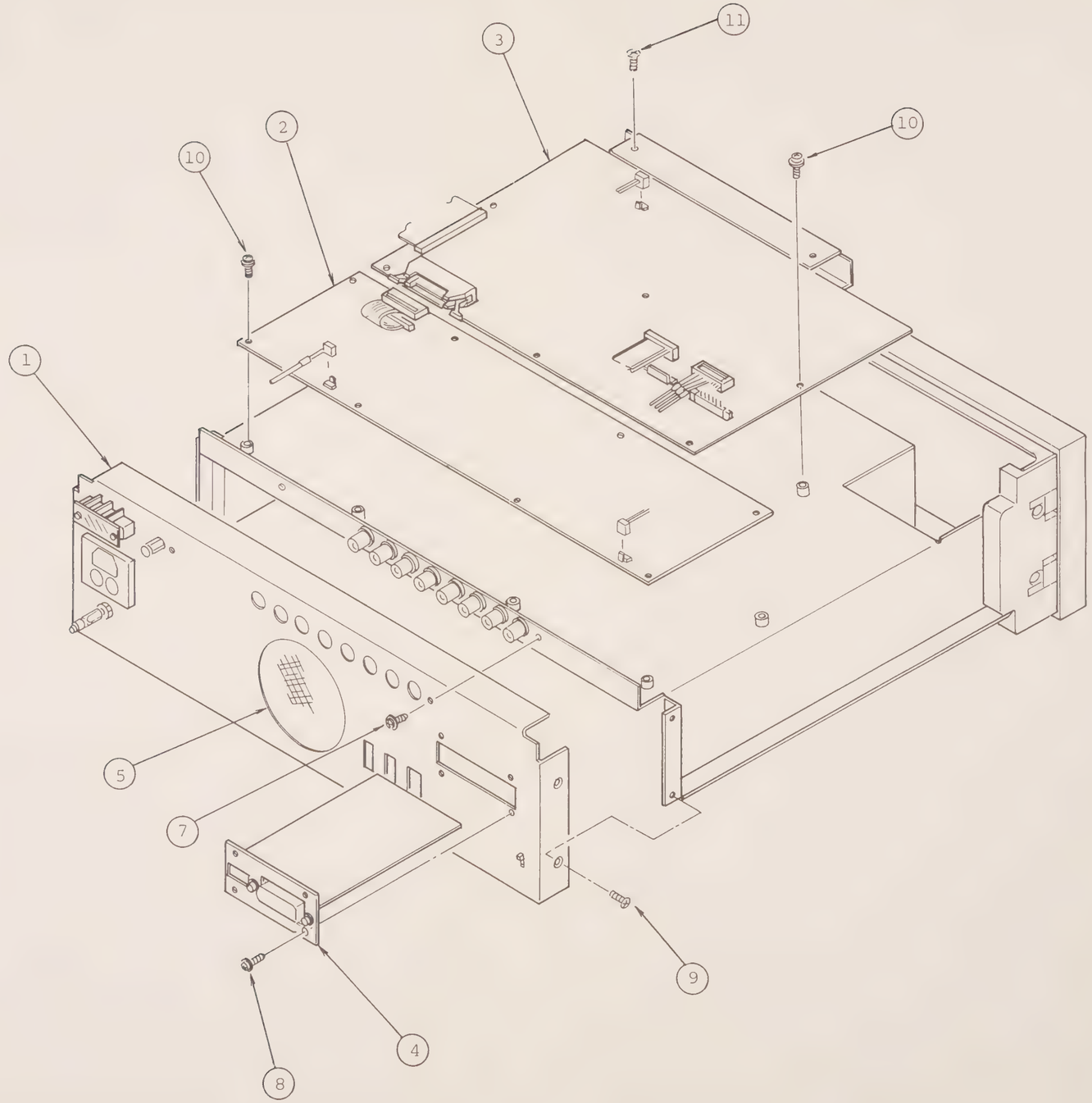

Fig. 2-5 Receiver Exploded View (Rear Panel)

2.2.4 Printer option 11 exploded view

Table 2-6 Mechanical Parts List

No.	Parts No.	Description	Remarks	Qty.
Fig. 2-6 ①	43B38103	Blank panel		1
②	44Y88122	Printer	OPT 11	1
③	44B90923	Washer		
④	44B90923	Stopper		
⑤	44H90472	Guide		
⑥	3FPS10B3	Screw		4
⑦	4NPS20B3+SW+WB	Screw		2

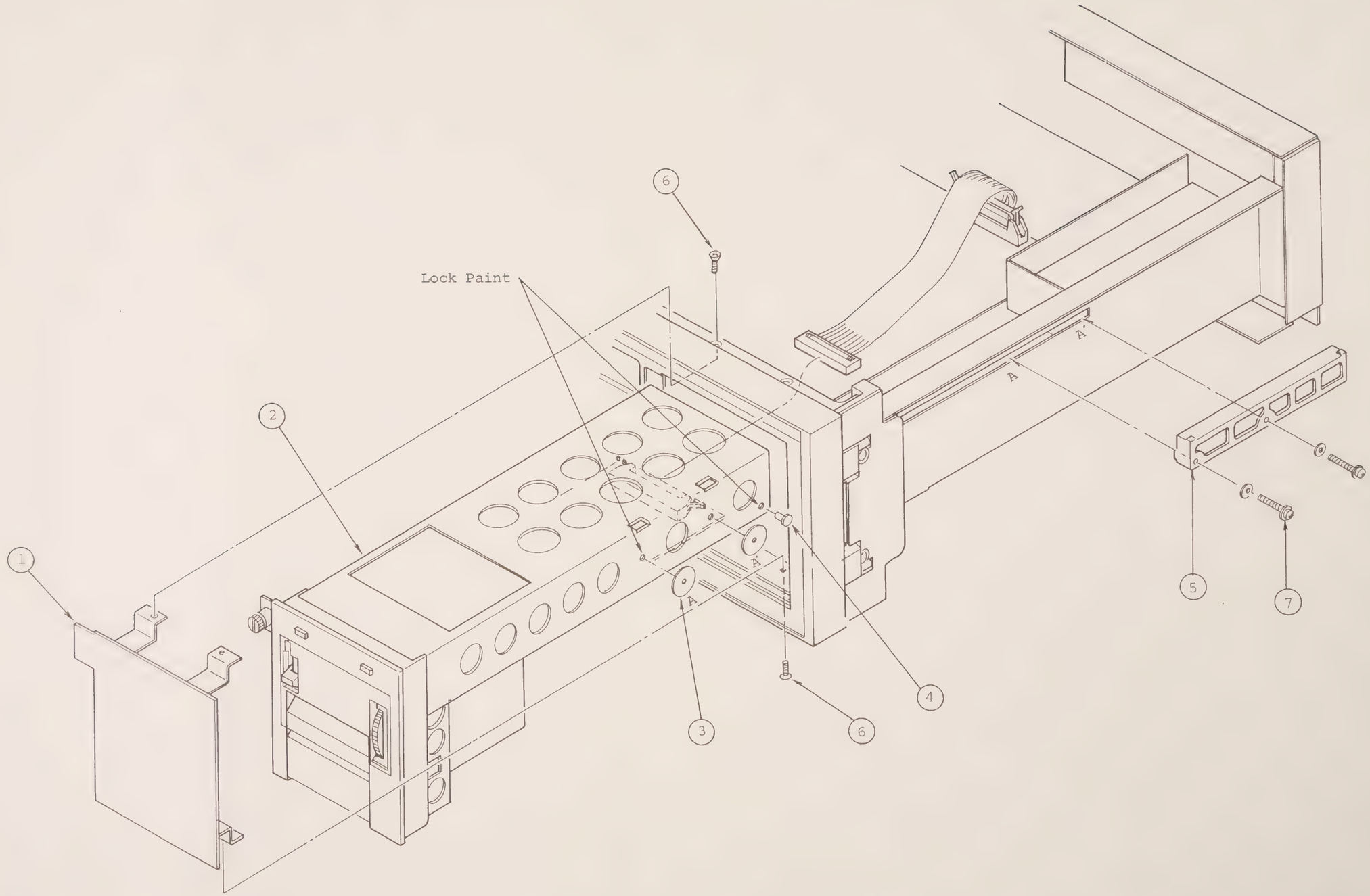

Fig. 2-6 Printer Option 11
Exploded View
(Blank Panel and Printer)

SECTION 3

TROUBLESHOOTING AND ADJUSTMENTS

3.1 Introduction

This section describes how to troubleshoot and adjust the instrument when trouble occurs during measurement or when abnormalities are detected during performance check operations.

This section also explains checking and replacement of parts, principles of operation providing details on circuits, and the equipment necessary to make repairs and adjustments.

Troubleshooting is diagrammed as follows.

Find PC board with trouble.

- o Performance Test (Operation Manual, SECTION 9)
- o Overall troubleshooting (paragraph 3.5.1)

↓

Troubleshoot according to each PC board troubleshooting explanation and circuit diagram.

- o Transmitter - paragraph 3.5, 1 to 9
- o Receiver - paragraph 3.6, 10 to 18

Fig. 3-1 Troubleshooting Procedure

Refer to each PC board circuit diagram and the parts layout for the positions of the test points to be checked when troubleshooting each PC board.

3.2 Checking and Replacing Parts, and Changing AC Power Supply Rating

3.2.1 Explanation of PC board identification markings

As shown in Fig. 3-2, each PC board in the ME3401A has a unified ASSEMBLY number, DRAWING number and REVISION number.

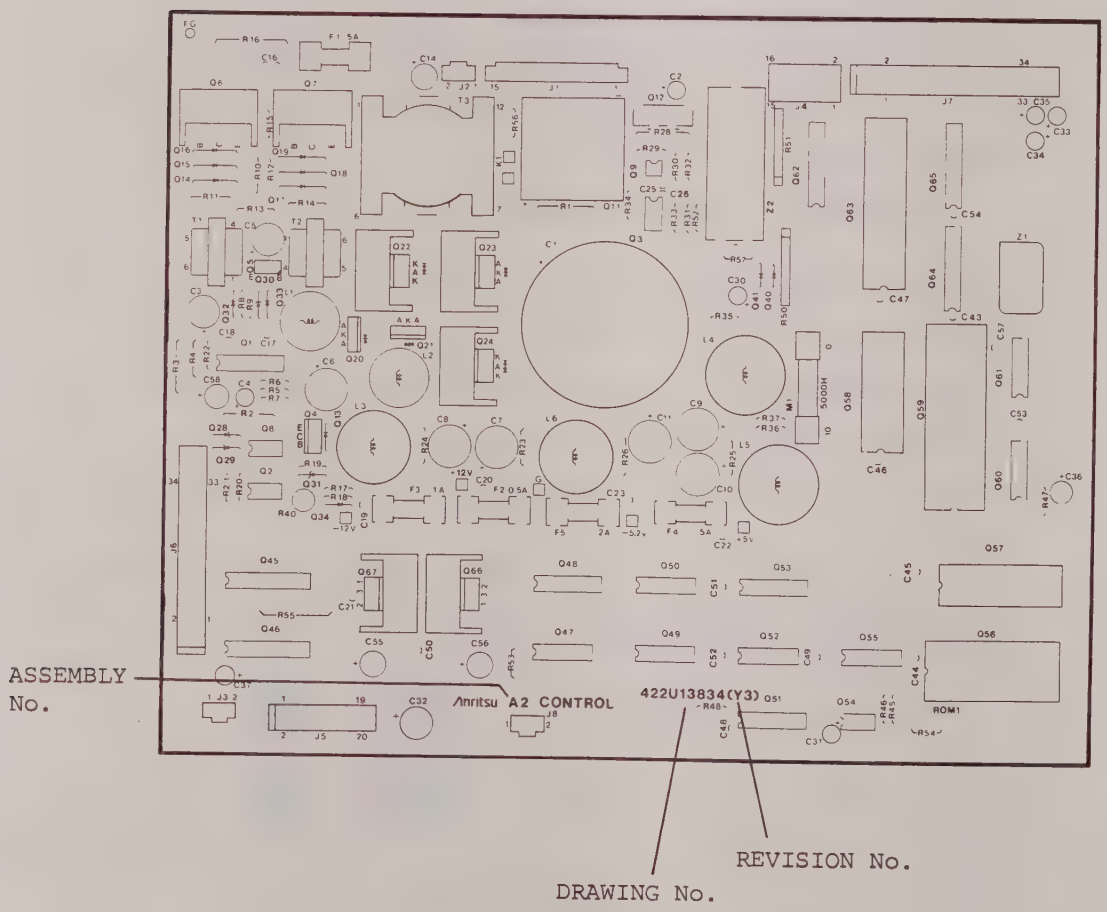

Fig. 3-2 Board Markings

3.2.2 Notes on soldering

(1) Use an ordinary 30- to 40-watt pencil-type soldering iron.

(2) Before using the soldering iron, be sure it is well insulated because leakage current may damage the part.

(3) When removing a soldered part from a circuit board or soldering in a new part, hold the part lead with tweezers to shunt heat.

(4) The tips of major part leads are bent behind the PC board to ensure tight support. To remove a part, first lift up the tips of the leads and then remove the part.

3.2.3 Transistor check

(1) Transistors mounted on PC board

Transistors can be checked for acceptable quality in the operating state by measuring the base and emitter potentials. NPN silicon transistors have a base potential that is 0.6 or 0.7 V higher than the emitter potential. In PNP silicon transistors, the former is 0.6 or 0.7 V lower than the latter. Transistors are faulty if these relationships are not satisfied.

(2) Transistors removed from PC board

Removed transistors can be checked by measuring the resistance between the emitter, base, and collector using a circuit tester. The standard values are given in Table 3-1. This check must be performed at a measuring current of less than 100 μA.

Table 3-1 Resistance Test of Unmounted Transistors

Type of Transistor	Connect Ohmmeter		Resistance
	Positive lead to	Negative lead to	
PNP silicon	Emitter, Collector	Base	1 Ω to 10 kΩ
	Emitter	Collector	Very high
NPN silicon	Base	Emitter, Collector	1 Ω to 10 kΩ
	Emitter	Collector	Very high

3.3 Equipment Required for Troubleshooting and Adjustment

The equipment listed in Table 3-2 and Table 3-3 is recommended for adjustment and troubleshooting. Different test equipment may be used if it meets the required characteristics listed in the table.

Table 3-2 Equipment Required for Troubleshooting and Adjusting ME3401A Transmitter

No.	Name	Major specification
1	Oscilloscope	Frequency band: DC to 300 MHz
2	Frequency counter	Frequency band: 0.01 Hz to 50 MHz
3	DC voltmeter	Meas. range: 0 to 100 V Resolution : 0.01 V
4	Signal generator	Frequency range: 1 to 50 MHz Resolution : 1 kHz
5	Terminator with 20 dB attenuation	Input/Output voltage ratio: 10:1
6	Pulse generator	Frequency range: 1 Hz to 10 MHz Level : TTL
7	Pulse Pattern Generator	Frequency band : 1 to 50 MHz Level : TTL, ECL Impedance : 75 Ω

Table 3-3 Equipment Required for Troubleshooting and Adjusting ME3401A Receiver

No.	Name	Major specification
1	Oscilloscope	Frequency range: DC to 300 MHz
2	Frequency counter	Frequency band: 10 Hz to 50 MHz
3	DC voltmeter	Meas. range: 0 to 100 V Resolution : 0.01 V
4	ME3401A Transmitter	

3.4 Circuit Reference

The PC boards in the ME3401A Transmitter and ME3401A Receiver have A numbers such as A3.

Tables 3-4 and 3-5 list the A numbers, circuit diagram names, PC board DRAWING numbers, and parts list numbers. CIRCUIT DIAGRAM Nos. are the numbers of the circuit diagrams shown in this section.

The parts list is given in SECTION 4.

Table 3-4 ME3401A Transmitter Circuit Reference

Circuit diagram No.	Name	A No.	PC board drawing No.	Parts list No.
1	ME3401A TRANSMITTER	———	———	44W88384
2	T-CONTROL	A2	422U13834	44W88386
3	PATTERN GENERATOR	A1	422U13832	44W88385
4	T-DISPLAY	A3	422U13836	44W88387
5	JITTER MODULATION	A4 (OPT 01)	422U13913	44W88388
6	MODULATION SIGNAL GENERATOR	A5 (OPT 01)	432U36046	44W88408
7	T-SWITCH	A6	442U91223	44W90993
8	GP-IB	A7 (OPT 41)	442U83054	44W83046
9	RS-232C	A8 (OPT 43)	442U83056	44W83047

Table 3-5 ME3401A Receiver Circuit Reference

Circuit diagram No.	Name	A No.	PC board drawing No.	Parts list No.
10	ME3401A RECEIVER	———	———	44W88389
11	R-CONTROL	A2	422U14527	44W91570
12	ERROR DET	A1	422U13838	44W88390
13	R-DISPLAY	A3	422U13842	44W88392
14	JITTER MEASUREMENT	A5 (OPT 02)	422U13911	44W88395
15	R-SWITCH	A4	442U88382	44W88394
16	PRINTER UNIT	A8	———	44W85802
17	PRINTER INTERFACE	Z1 in A8	432U34770	44W85804
18	PRINTER CONTROL	Z2 in A8	442U77432	44W85805
8	GP-IB	A6 (OPT 42)	442U83054	44W83046
9	RS-232C	A7 (OPT 43)	442U83056	44W83047
19	DS-1 OUTPUT	A9 (OPT 03)	442U95076	44W95156

3.5 Transmitter Troubleshooting and Adjustment

3.5.1 Overall troubleshooting 1

(1) Overall circuit description

Figure 3-3 is the transmitter simplified block diagram. The ME3401A transmitter consists of A1 PATTERN GENERATOR, A2 T-CONTROL, A3 T-DISPLAY, A4 JITTER MODULATION, A5 MODULATION SIGNAL GENERATOR, A6 T-SWITCH, A7 GP-IB, and A8 RS-232C.

For the details of each circuit, refer to paragraph 3.5.2 to 3.5.7.

(2) Overall troubleshooting

If a problem is indicated by the performance check (operation manual, SECTION 9), locate the fault by using the following procedures.

[Step 1]

When power switch turned on, POWER-ON lamp comes on?

No

AC operation

- AC power cord not connected to AC power supply
- Rear-panel AC fuse blown
- AC power circuit (A2 and S1) faulty
- LED (Q10-A3) faulty

DC operation

- Abnormal DC supply voltage (Specification: -22 to -53 V)
- Connection abnormal between DC power supply and DC input connector
- POWER circuit (A2 and S1) is defective.
- LED (Q10-A3) is defective.

[Step 2]

When each switch on front panel operated, each display (including LEDs) comes on normally?

No

A2 T-CONTROL faulty (paragraph 3.5.2)

A3 T-DISPLAY faulty (paragraph 3.5.4)

[Step 3]

If the internal clock, external clock, pattern, frame, error addition, DS-3 output, DS-1/DS-1C/DS-2 output, unipolar output, and X-bit input are abnormal, the A1 PATTERN GENERATOR is abnormal (paragraph 3.5.3).

[Step 4]

If the JITTER MODULATION is abnormal, either A4 JITTER MODULATION (paragraph 3.5.5) or A5 MODULATION SIGNAL GENERATOR (paragraph 3.5.6) is abnormal, or both are abnormal.

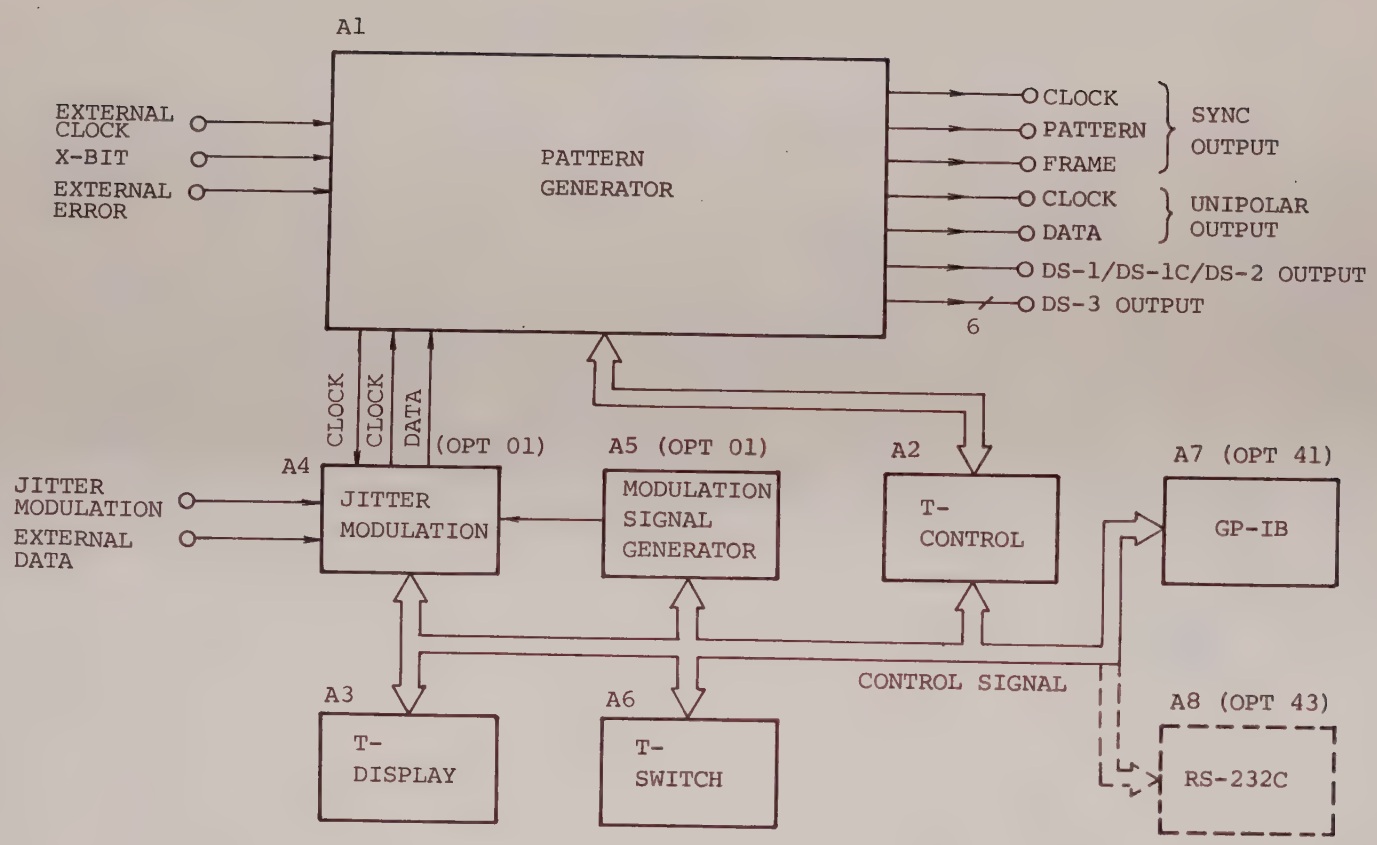

Fig. 3-3 ME3401A Transmitter Simplified Block Diagram

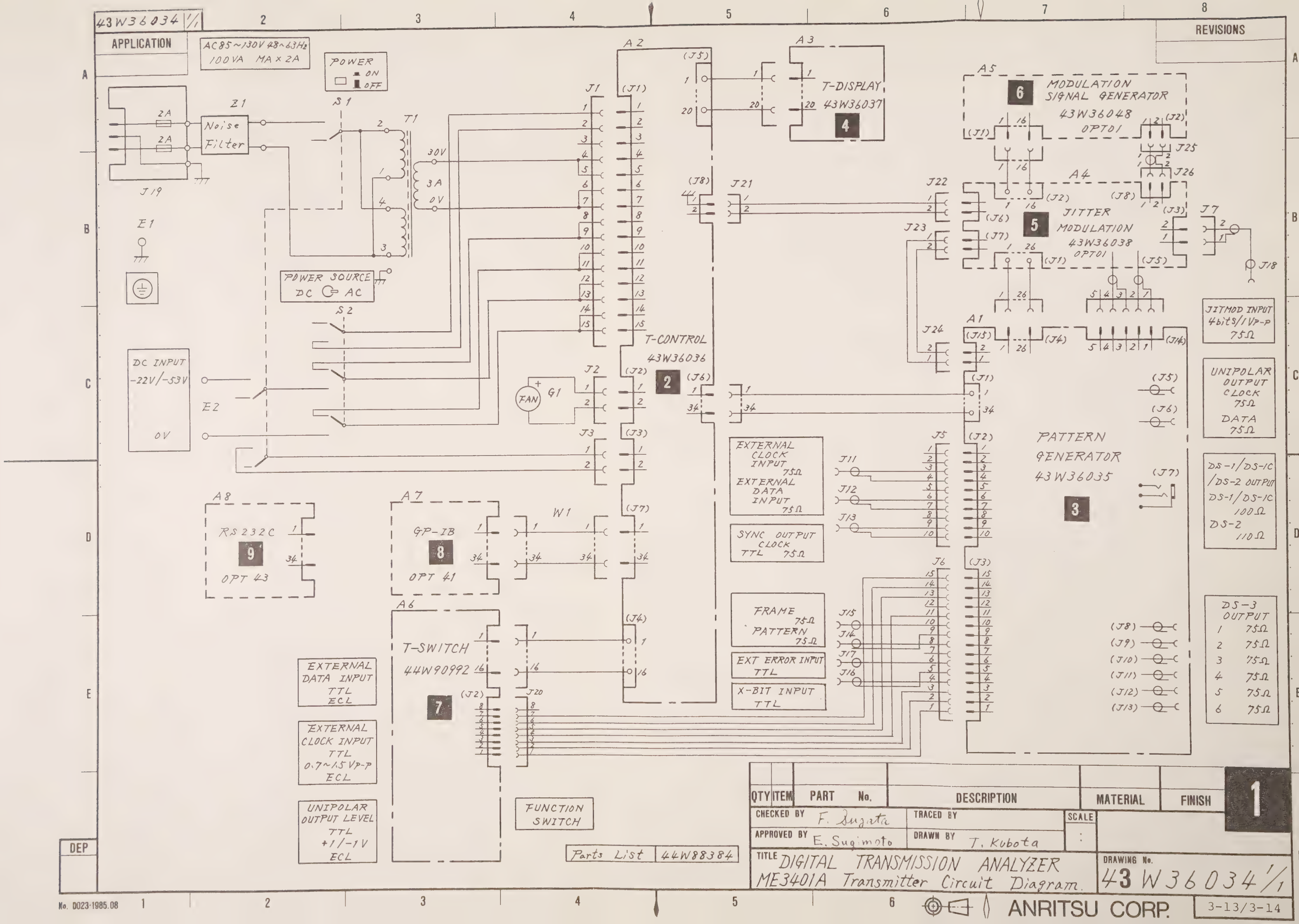
43W36034 1/1
APPLICATION
AC85~130V 48~63Hz
100VA MA×2A
POWER
ON
OFF
Z1
Noise Filter
S1
T1
30V
3A
0V
J19
E1
POWER SOURCE
DC AC
S2
DC INPUT
-22V/-53V
0V
E2
FAN
G1
A2
T-CONTROL
43W36036
2
A3
T-DISPLAY
43W36037
4
A5
6
MODULATION SIGNAL GENERATOR
43W36048
OPT01
A4
5
JITTER MODULATION
43W36038
OPT01
A1
PATTERN GENERATOR
43W36035
3
J7
J18
JITMOD INPUT
4bits/1Vp-p
75Ω
UNIPOLAR OUTPUT
CLOCK
75Ω
DATA
75Ω
DS-1/DS-1C
/DS-2 OUTPUT
DS-1/DS-1C
100Ω
DS-2
110Ω
DS-3
OUTPUT
1 75Ω
2 75Ω
3 75Ω
4 75Ω
5 75Ω
6 75Ω
EXTERNAL CLOCK INPUT
75Ω
EXTERNAL DATA INPUT
75Ω
SYNC OUTPUT
CLOCK
TTL 75Ω
FRAME 75Ω
PATTERN 75Ω
EXT ERROR INPUT
TTL
X-BIT INPUT
TTL
A8
RS232C
9
OPT 43
A7
GP-IB
8
OPT 41
W1
A6
T-SWITCH
44W90992
7
EXTERNAL DATA INPUT
TTL
ECL
EXTERNAL CLOCK INPUT
TTL
0.7~1.5Vp-p
ECL
UNIPOLAR OUTPUT LEVEL
TTL
+1/-1V
ECL
FUNCTION SWITCH
Parts List 44W88384
REVISIONS
DEP
QTY ITEM PART No. DESCRIPTION MATERIAL FINISH
1
CHECKED BY F. Sugata
APPROVED BY E. Sugimoto
TRACED BY
DRAWN BY T. Kubota
SCALE
TITLE DIGITAL TRANSMISSION ANALYZER
ME3401A Transmitter Circuit Diagram.
DRAWING No. 43W36034 1/1
ANRITSU CORP.
3-13/3-14
No. D023-1985.08

3.5.2 A2 T-CONTROL PC board 2

(1) Circuit description

A2 T-CONTROL consists of the front switches, display, circuits, GP-IB and RS-232C control circuits, and +5, +12, -5.2, and -12 V power circuits.

(2) Troubleshooting

[Step 1]

Check waveform between ❶ and ground using an oscilloscope.

The waveform shown in Fig. 3-4 is normal. Also, check the frequency at ❶ using a frequency counter.

A frequency of 4.000 MHz is normal.

If both the waveform and frequency are normal, proceed to the next step.

If they are abnormal, troubleshoot the circuits related to Z1, Q61, and Q60.

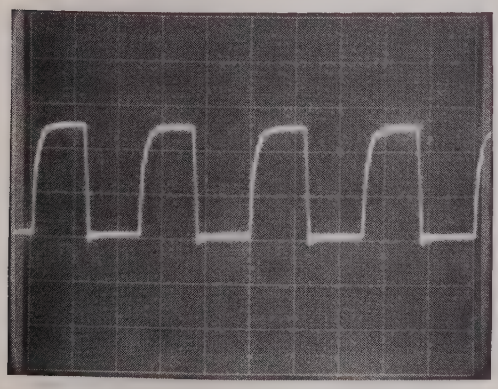

—0 V

V: 2 V/div
H: 100 ns/div

Fig. 3-4 Waveform at ❶

[Step 2]

Check the voltage between ❷, ❸ and ground using an oscilloscope. If it is within the range of +3 to +5.5 V, it is normal. If it is normal, proceed to the next step. If it is abnormal, troubleshoot the circuits related to ❷ and ❸.

[Step 3]

Check the waveform between ❹ and ground using an oscilloscope. The waveform shown in Fig. 3-5 is normal. If it is normal, proceed to the next step.

If it is abnormal, troubleshoot the circuit related to ❹.

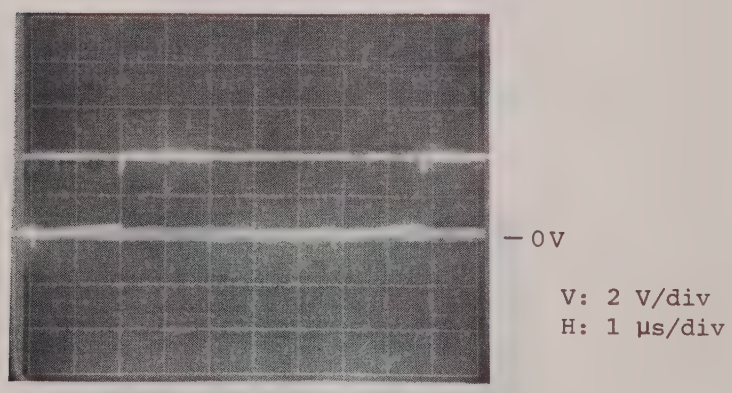

Fig. 3-5 Waveform at ❹

[Step 4]

Check the voltage between ❺ and ground using a DC voltmeter. A voltage within the range of +2.5 to +4 V it is normal.

If it is normal, proceed to the next step.

If it is abnormal, troubleshoot the circuits related to Z2 and R57.

[Step 5]

Check the waveform between ❻ and FG using an oscilloscope.

The waveform shown in Fig. 3-6 is normal.

Also, check that the voltage between ❻ and FG is within the range of +30 to +50 V (at AC operation).

If both the waveform and voltage are normal, proceed to the next step.

If they are abnormal, troubleshoot the circuit related to ❻.

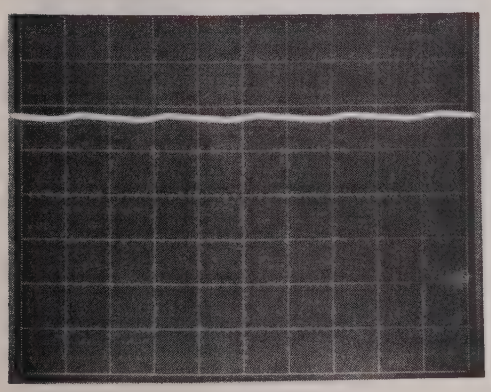

—0 V

V: 10 V/div
H: 5 ms/div

Fig. 3-6 Waveform at ❻

[Step 6]

Check the voltage between ❼ and FG using a DC voltmeter.

A voltage within the range of +13 to +18 V is normal.

If it is normal, proceed to the next step.

If it is abnormal, troubleshoot the circuit related to ❼ .

[Step 7]

Check the waveform between ❽ and FG using an oscilloscope.

The waveform shown in Fig. 3-7 is normal.

If it is normal, proceed to the next step.

If it is abnormal, troubleshoot the circuit related to ❽ .

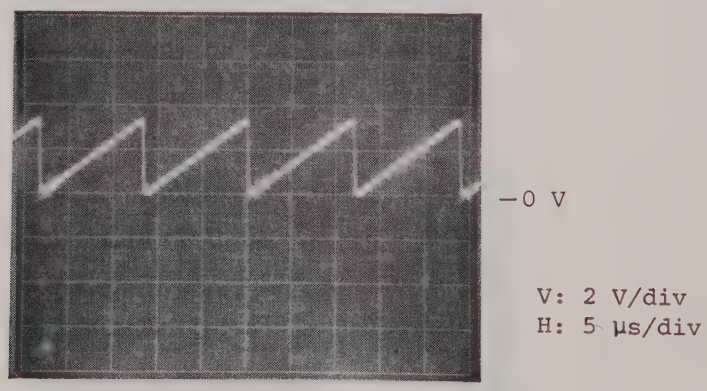

Fig. 3-7 Waveform at ❽

[Step 8]

Check the waveforms between ❾ , ❿ and FG using an oscilloscope. The waveform shown in Fig. 3-8 is normal.

If it is normal, proceed to the next step.

If it is abnormal, troubleshoot the circuits related to ❾ and ❿.

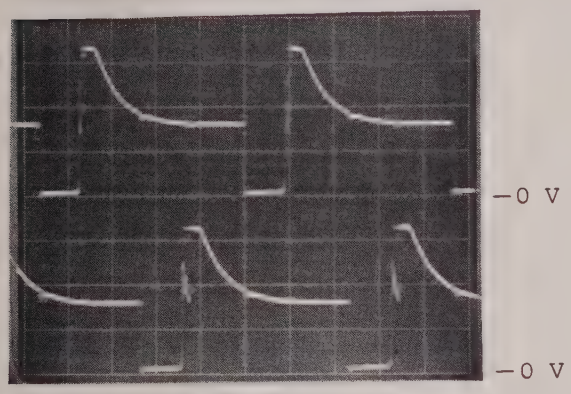

V: 10 V/div
H: 5 μs/div

Fig. 3-8 Waveforms at ❾ and ❿

[Step 9]

Check the waveform between ⓫ and FG using an oscilloscope.

The waveform shown in Fig. 3-9 is normal.

If it is normal, proceed to the next step.

If it is abnormal, troubleshoot the circuits related to ⓫.

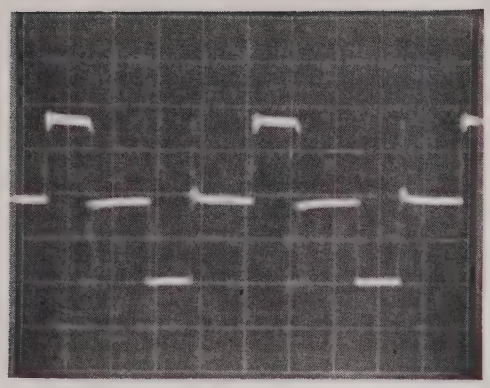

—0 V

V: 20 V/div

H: 5 μs/div

Fig. 3-9 Waveform at ⓫

[Step 10]

Check the waveform between ⓬ and FG using an oscilloscope.

The waveform shown in Fig. 3-10 is normal.

If it is normal, proceed to the next step.

If it is abnormal, troubleshoot the circuits related to ⓬.

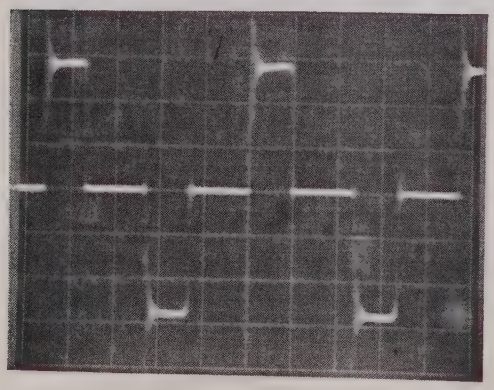

—0 V

V: 5 V/div

H: 5 μs/div

Fig. 3-10 Waveform at ⓬

[Step 11]

Check the voltage between ⓰ and ground using a DC voltmeter.

A voltage within the range of -5.0 to -5.5 V is normal.

If it is normal, proceed to the next step.

If it is abnormal, adjust R40.

If it is still abnormal, troubleshoot circuits ⓬ to ⓰ and ⓱ to ⓯ and the circuits related to R40.

[Step 12]

Check the voltage between ⓭, ⓮, ⓯, and ground using a DC voltmeter.

Test Point	Voltage range
⓭	+4.8 V to +5.5 V
⓮	-11.4 V to -12.6 V
⓯	+11.4 to +12.6 V

A voltage within the above range is normal and A2 is normal.

If it is abnormal, troubleshoot the circuits related to ⓭, ⓮, and ⓯.

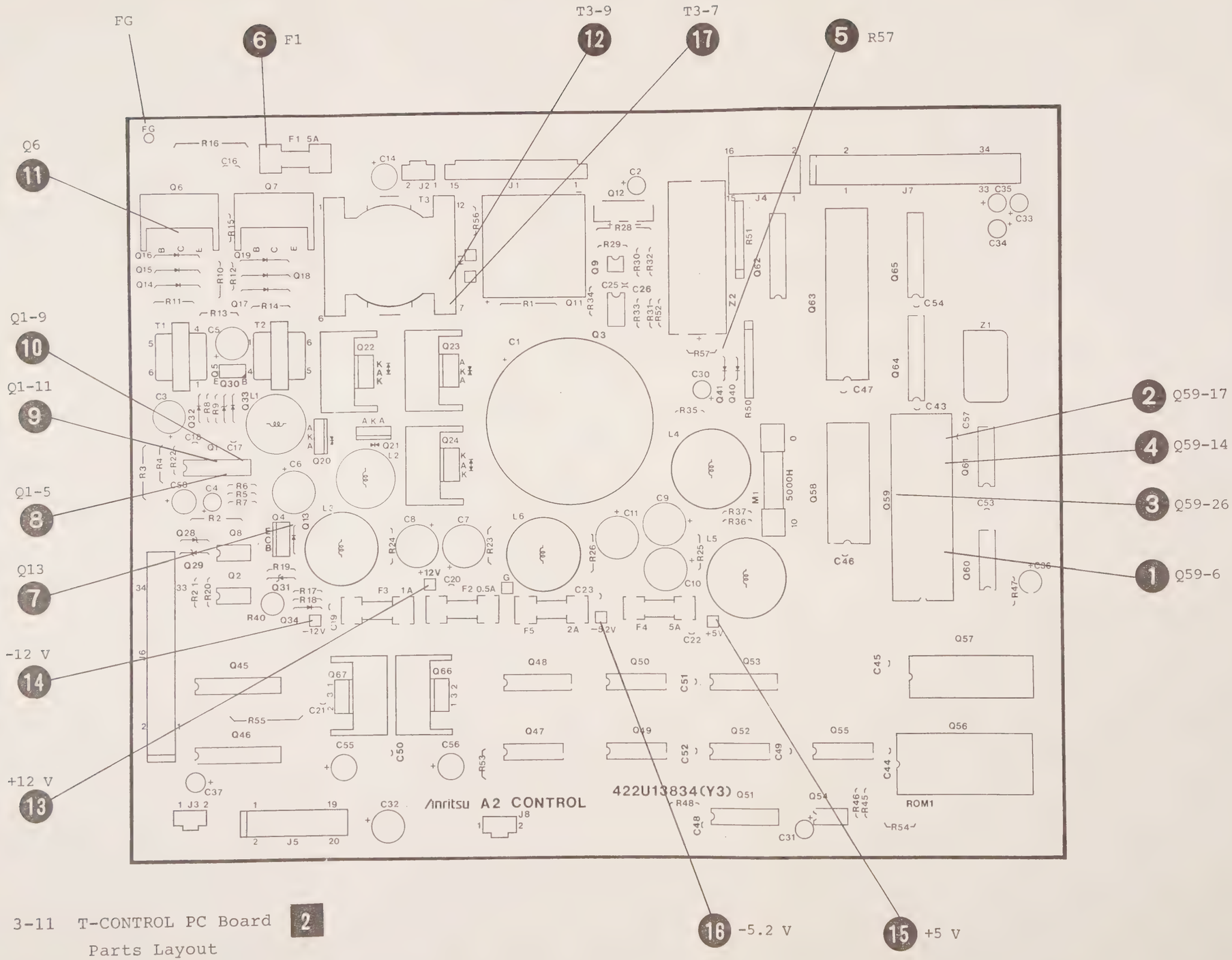

Fig. 3-11 T-CONTROL PC Board 2
Parts Layout

43W36036 1/3

APPLICATION

REVISIONS

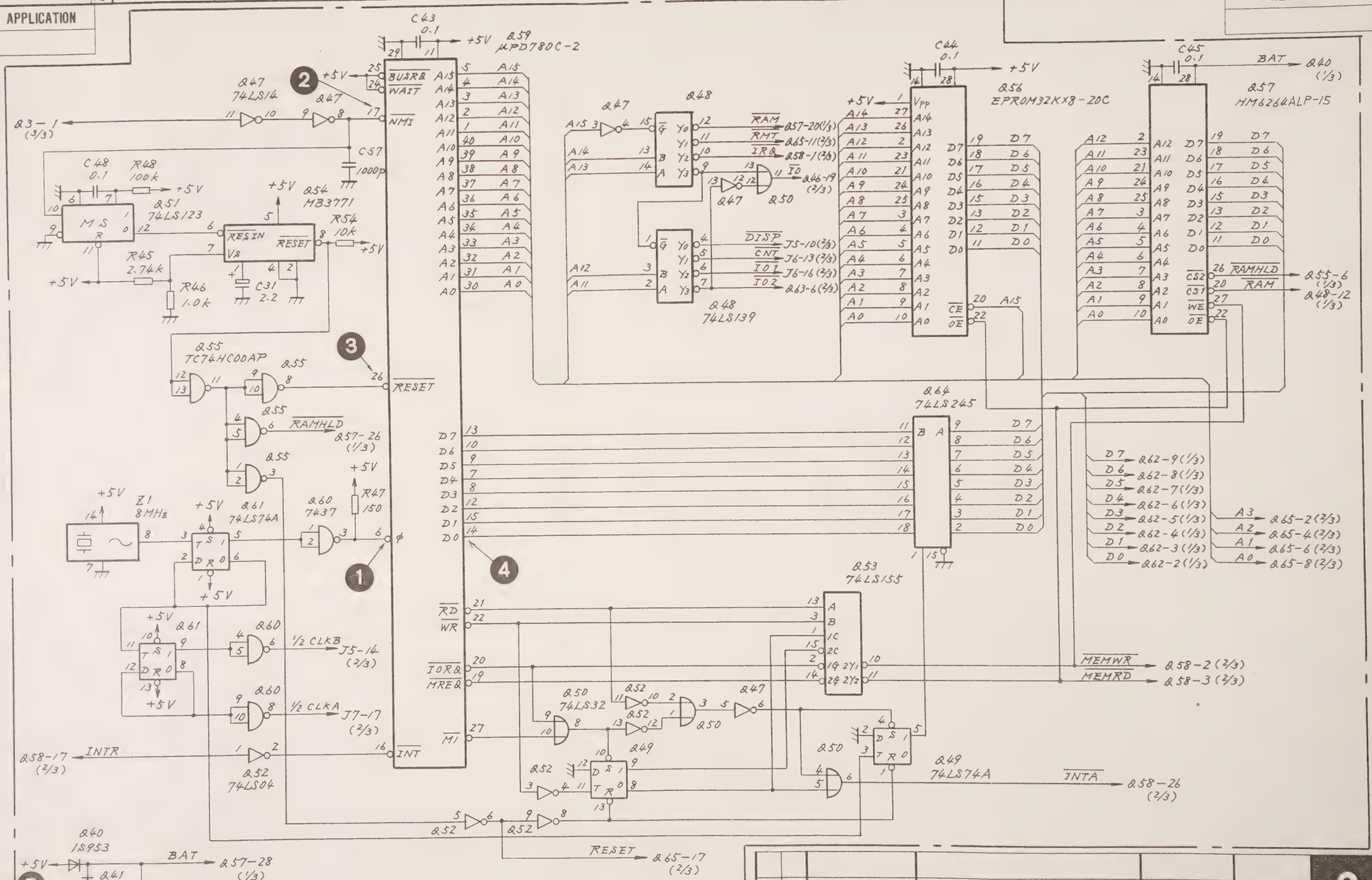

QTY	ITEM	PART No.	DESCRIPTION	MATERIAL	FINISH

Parts List 44W88386

CHECKED BY F. Sugata
APPROVED BY E. Sugimoto
TRACED BY
DRAWN BY T. Kubota
SCALE M-1

TITLE A2 T-CONTROL Circuit Diagram (Transmitter)

DRAWING No. 43W36036 1/3

2

DEP

No. D023-1985.08

ANRITSU CORP.

3-23/3-24

43 W 36036 2/3

APPLICATION

REVISIONS

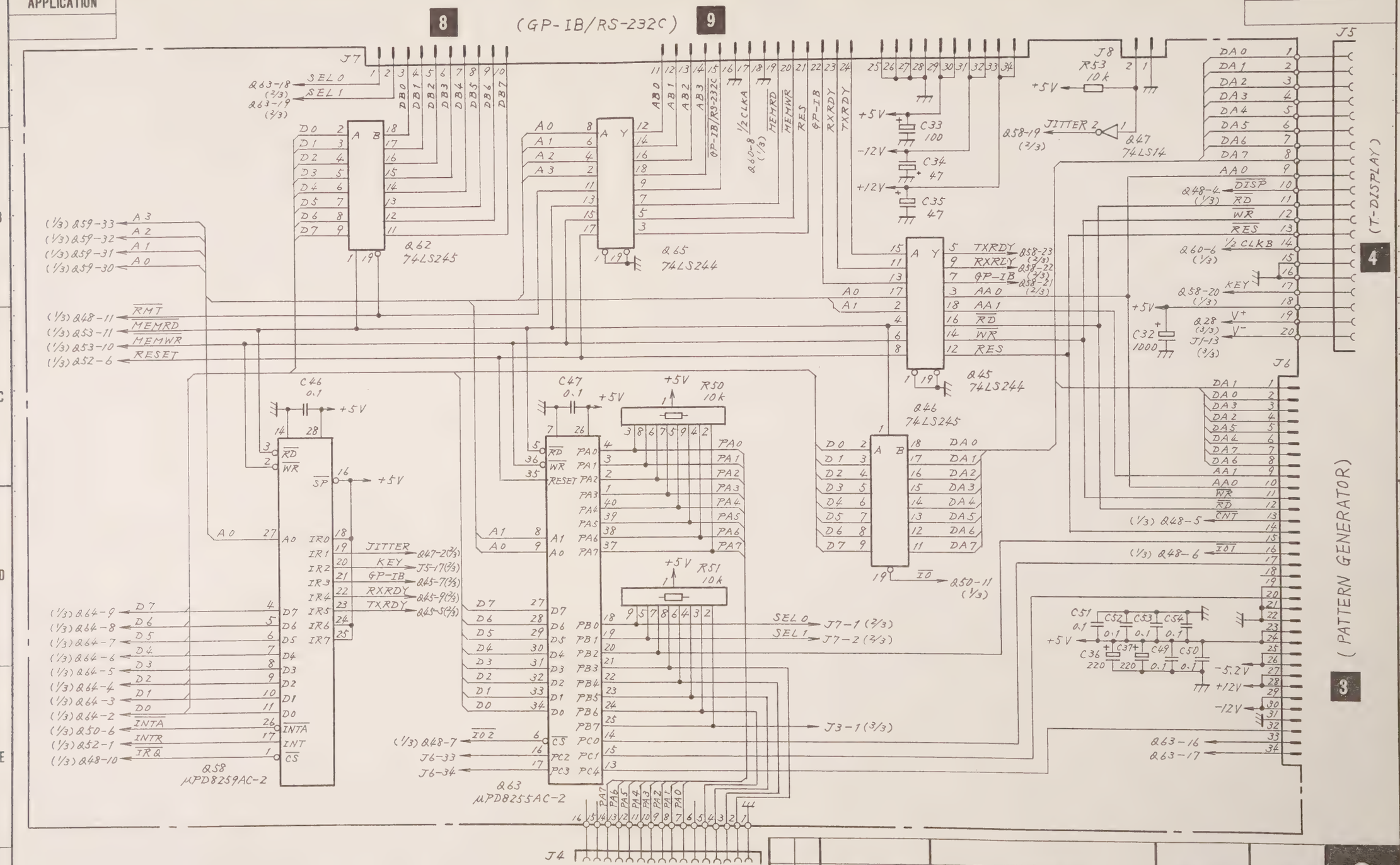

QTY	ITEM	PART No.	DESCRIPTION	MATERIAL	FINISH

CHECKED BY F. Sugata
APPROVED BY E. Sugimoto
TRACED BY
DRAWN BY T. Kubota
SCALE :

TITLE A2 T-CONTROL Circuit Diagram (Transmitter)

DRAWING No. 43 W 36036 2/3

DEP

No. D023-1985.08

ANRITSU CORP.

3-25/3-26

43W36036 3/3

APPLICATION

REVISIONS

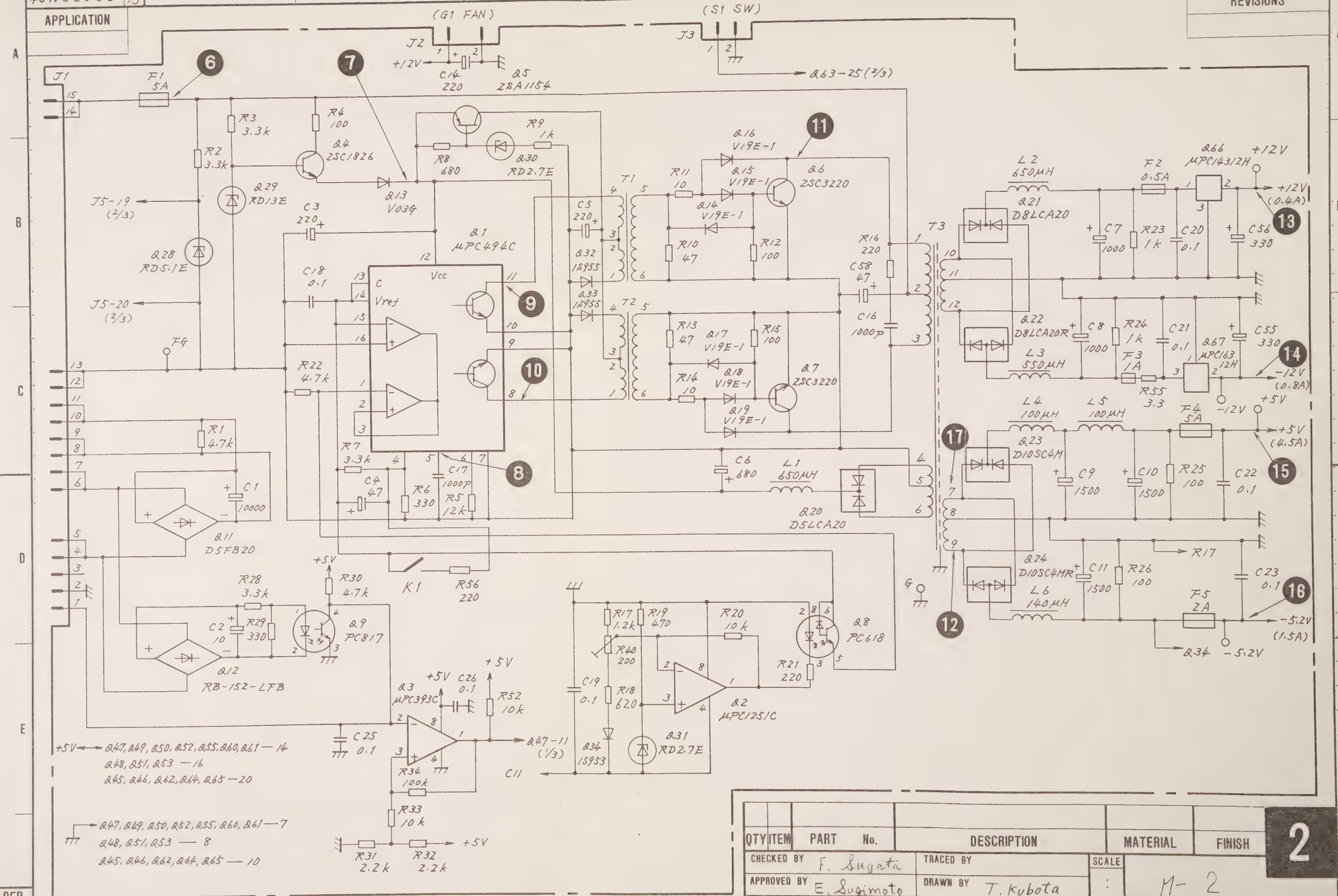

QTY	ITEM	PART No.	DESCRIPTION	MATERIAL	FINISH

CHECKED BY F. Sugata | TRACED BY | SCALE

APPROVED BY E. Sugimoto | DRAWN BY T. Kubota | : M-2

TITLE A2 T-CONTROL Circuit Diagram (Transmitter)

DRAWING No. 43W36036 3/3

2

DEP

No. D023-1985.08

ANRITSU CORP.

3-27/3-28

3.5.3 A1 PATTERN GENERATOR PC Board 3

(1) Circuit description

Figure 3-12 shows the block diagram of this circuit.

A1 PATTERN GENERATOR circuit consists of the CLOCK SIGNAL GENERATOR circuit, PATTERN/FRAME GENERATOR circuit, ERROR ADDITION circuit, CODE CONVERTER circuit, U/B CONVERTER circuit, DELAY circuit and UNIPOLAR OUTPUT circuit.

The CLOCK GENERATOR circuit generates four internal clock (44.736, 6.312, 3.152 and 1.544 MHz) and selects one clock signal from the four internal clocks and one external clock signal (1 to 50 MHz).

The PATTERN/FRAME GENERATOR circuit and generates a pattern (PRBS, 1111, 1100, 1010, 1000) and frame corresponding to each bit rate.

The ERROR ADDITION circuit divides the clock signal, generates an error pulse and adds a 1-bit error to the NRZ signal. For an external error, a 1-bit error or burst error is added.

The UNIPOLAR OUTPUT circuit shapes the waveform of the NRZ pattern signal and clock signal and outputs them after level conversion (TTL, +/-1 V, or ECL). The number of outputs is one system for each clock signal and data signal.

The CODE CONVERTER circuit converts the NRZ pattern sginal to the signal that has the code corresponding to each bit rate (B3ZS for DS-3, B6ZS for DS-2, and B8ZS for DS-1) and branches the converted signal into + and - routes.

The UNIPOLAR to BIPOLAR CONVERTER circuit converts the branched NRZ signal to the RZ signal and bipolar signal, and outputs the converted signal. The DS-3 signal is output to six unbalanced output connectors. For each output, the phase is delayed by 3 bits in order No.1 to No.6 in the DELAY circuit.

The DS-1/DS-1C/DS-2 signal is output to one balanced output connector.

The clock, pattern, and frame are output synchronously.

The clock signal is output to the A4 JITTER MODULATION circuit and the modulated clock signal and external data signal are input from the A4 JITTER MODULATION circuit.

There is also an X-bit input signal.

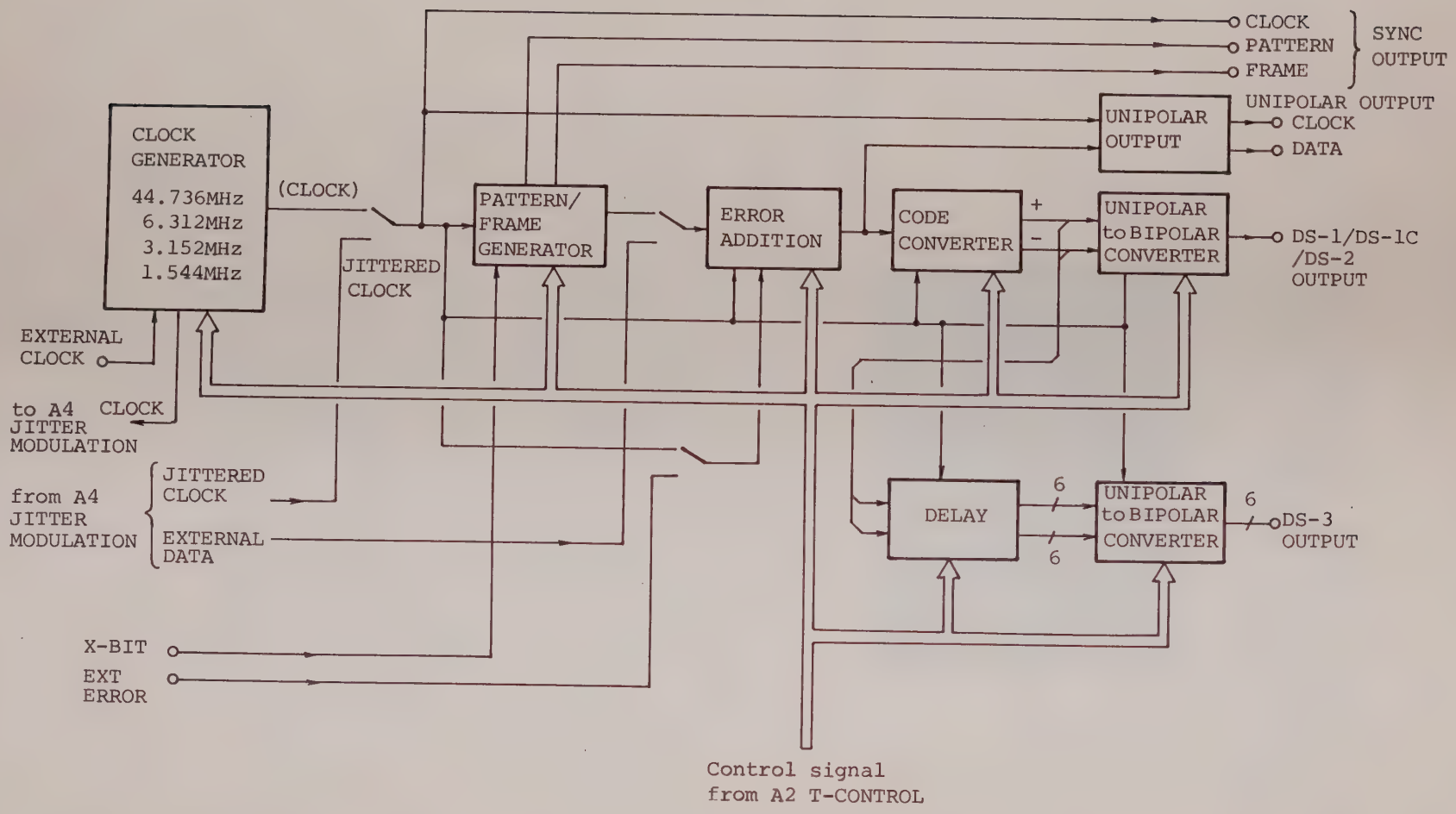

Fig. 3-12 A1 PATTERN GENERATOR Block Diagram

(2) Troubleshooting and adjustment

(a) Checking DS-3 output

Panel setting

CLOCK	:	DS-3
JITTER MODULATION	:	OFF
DS-3 LEVEL	:	HIGH
FUNCTION SWITCH (Rear panel)	:	All "0"

[Step 1]

Check the waveform at ❶ using an oscilloscope.

The waveform shown in Fig. 3-13 is normal. Also, check the frequency at ❶ using a frequency counter.

A frequency within the range of 44.735560 to 44.736440 MHz is normal. If it is normal, proceed to the next step. If it is abnormal, make the following adjustment.

Adjustment

1. Adjust R45 so that the waveform at ❶ is as shown in Fig. 3-13.
2. Adjust C15 to match the frequency.

If the frequency is abnormal even after the above adjustments ❶ and ❷ have been made, troubleshoot the circuits related to X1 to ❶.

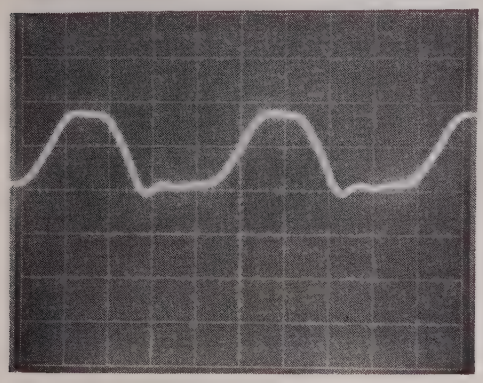

V: 2 V/div
H: 5 ns/div

Fig. 3-13 Waveform at ❶ (DS-1)

CAUTION

When waveforms are observed using an oscilloscope, accurate waveforms cannot be observed unless the oscilloscope probe earth lead is connected to the nearest earth point to the measuring point.

[Step 2]

Check the waveform at ❻ using an oscilloscope.

The waveform shown in Fig. 3-14 is normal.
If it is normal, proceed to the next step.
If it is abnormal, troubleshoot the circuits related to ❶ to ❻.

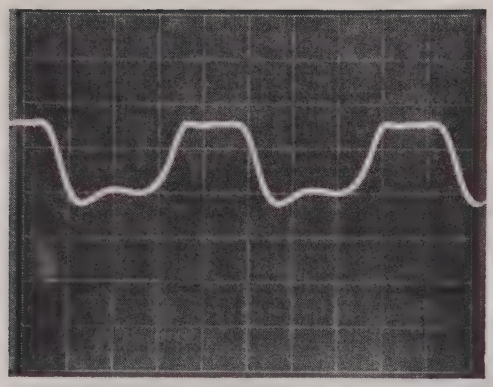

V: 2 V/div
H: 5 ns/div

Fig. 3-14 Waveform at ❻

[Step 3]

Check the waveforms and phases at ❽ and ❿ using an oscilloscope. The waveform and phase shown in Fig. 3-15 are normal.

If they are normal, proceed to the next step. If they are abnormal, troubleshoot the circuits related to ❶ to ❿ and Q101.

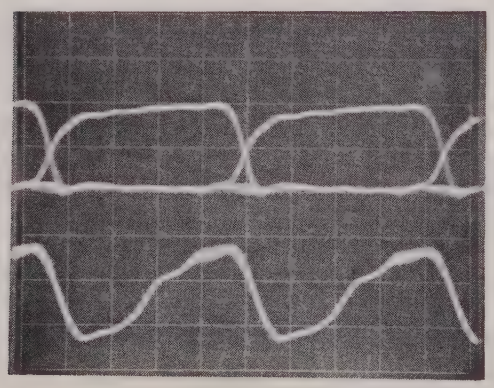

V: 2 V/div
H: 5 ns/div

Fig. 3-15 Waveforms at ❽ and ❿

[Step 4]

Check the waveforms and phases at ⑯ and ⑰ using an oscilloscope. The waveform and phase shown in Fig. 3-16 are normal. If they are normal, proceed to the next step. If they are abnormal, make the following adjustment.

Adjustment

Adjust R47, R48, and R49 so that the waveform at ⑯ is as shown in Fig. 3-16. If it is not normal after the above adjustment has been made, troubleshoot the circuits related to ❶ to ⑯, Q121 to Q122, Q119 to Q120, and Q119 to Q118.

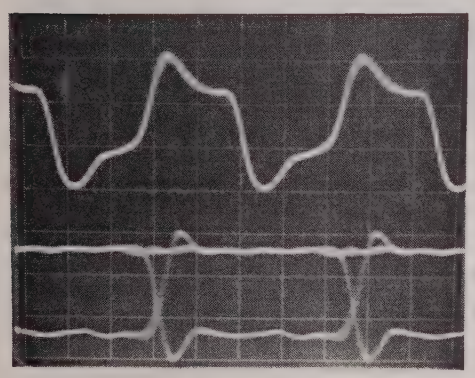

Fig. 3-16 Waveforms at ⑯ and ⑰

[Step 5]

Check the waveforms at ⓲ and ⓳ using an oscilloscope pribe. The waveforms shown in Fig. 3-17 are normal. If they are normal, proceed to the next step.

If they are abnormal, troubleshoot the circuits related to Q122 to Q110, Q120 to Q109, and Q118 to Q107.

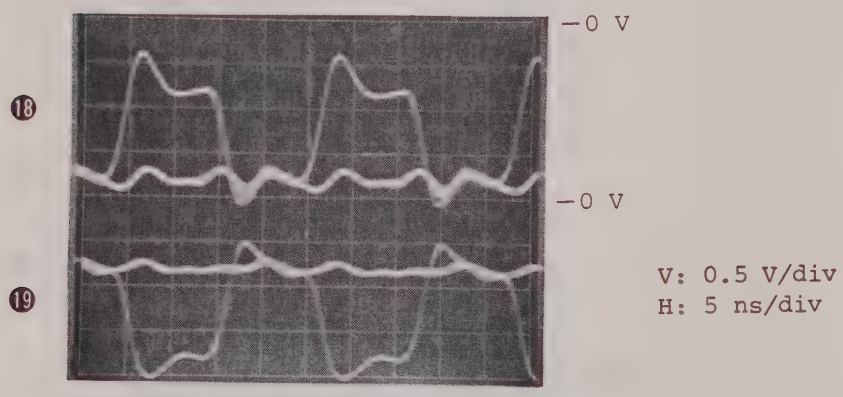

Fig. 3-17 Waveforms at ⓲ and ⓳

[Step 6]

Check the DS-3 output waveform. Set-up shown in Fig. 3-18.

The waveform shown in Fig. 3-19 is normal.

If it is normal, the DS-3 output waveform is normal.

If it is abnormal, make the following adjustment.

Adjustment

Adjust the level.

Table 3-6 DS-3 OUTPUT Adjustment

DS-3 OUTPUT	LEVEL		DUTY	
	+Pulse	-Pulse	+Pulse	-Pulse
1 (J8)	R281	R282	R390	R391
2 (J9)	R283	R284	R392	R393
3 (J10)	R285	R286	R394	R395
4 (J11)	R287	R288	R396	R397
5 (J12)	R289	R290	R398	R399
6 (J13)	R291	R292	R400	R401

If the waveform is abnormal after the above adjustment has been made, troubleshoot the circuits related to J8 to J13.

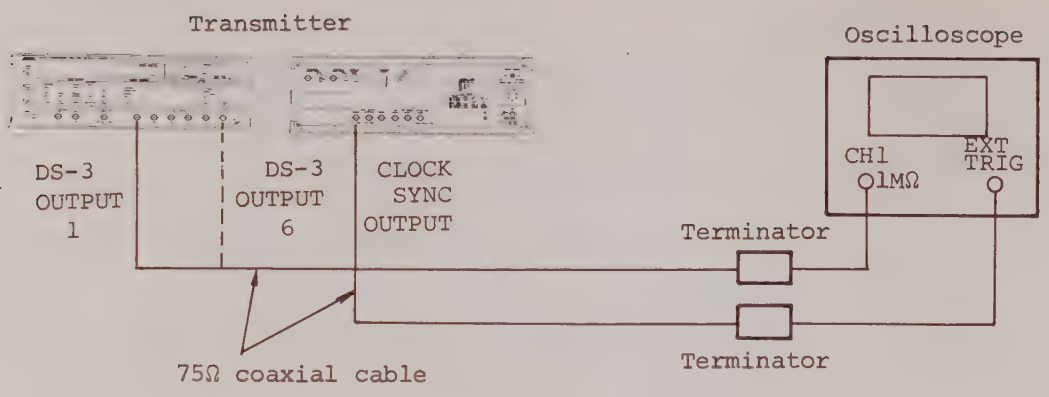

Fig. 3-18 Setup

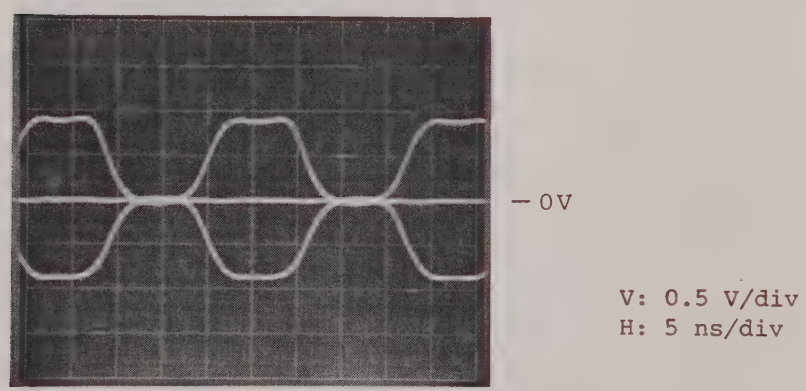

Fig. 3-19 DS-3 OUTPUT

(b) Checking DS-2 output

Panel setting

CLOCK	: DS-2
JITTER MODULATION:	OFF
FUNCTION SWITCH A (Rear Panel):	All "0"

[Step 1]

Check the waveform at ❶ using an oscilloscope.

The waveform shown in Fig. 3-20 is normal.

Also, check the frequency at ❶ using the frequency counter.

A frequency in the range of 6.311937 to 6.312063 MHz is normal.

If it is normal, proceed to the next step.

If the frequency is abnormal, make the following adjustement.

Adjustment

Adjust C16 to match the frequency.

If the frequency is abnormal after the above adjustment has been made, troubleshoot the circuits related to X2 to ❶ .

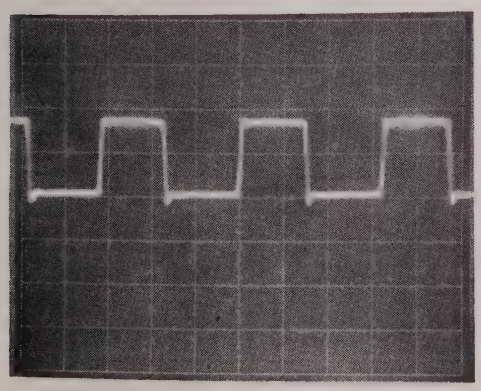

V: 2 V/div
H: 50 ns/div

Fig. 3-20 Waveform at ❶

[Step 2]

Check the waveforms at ⓮ and ⓯ using an oscilloscope. The waveforms shown in Fig. 3-21 are normal. If they are normal, proceed to the next step.

If they are abnormal, troubleshoot the circuits related to ❶ to ⓮ and ❶ to ⓯.

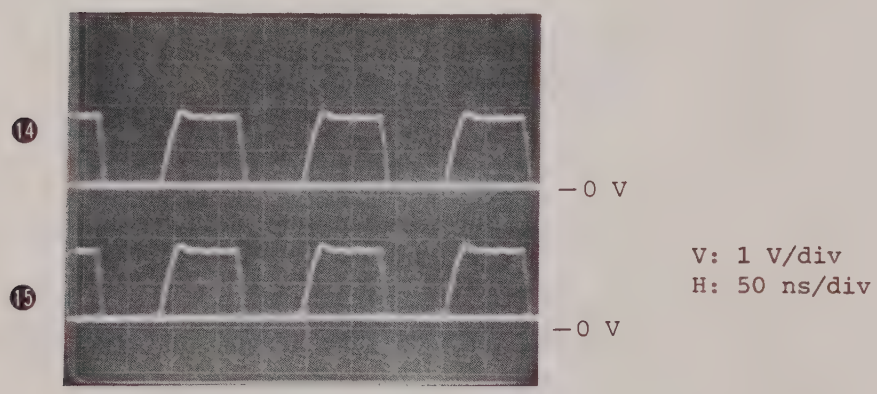

Fig. 3-21 Waveforms at ⓮ and ⓯

[Step 3]

Check the DS-2 output waveform. Set-up as shown in Fig. 3-22.

The waveform shown in Fig. 3-23 is normal.

If it is normal, DS-2 is normal.

If it is abnormal, make the following adjustment.

Adjustment

Adjust the output level at R294 while checking the output waveform.
If the waveform is abnormal after the above adjustment has been made, troubleshoot the circuits related to ⓮ and ⓯ to J7.

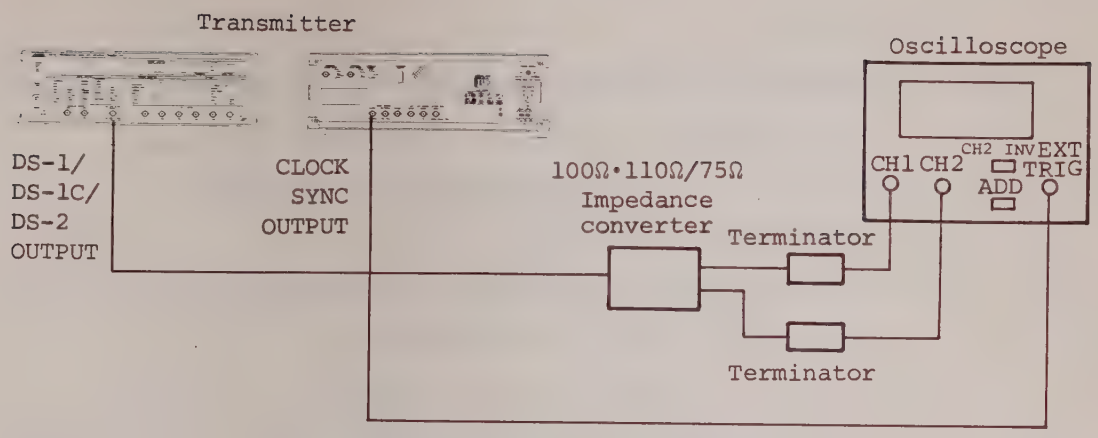

Fig. 3-22 Setup

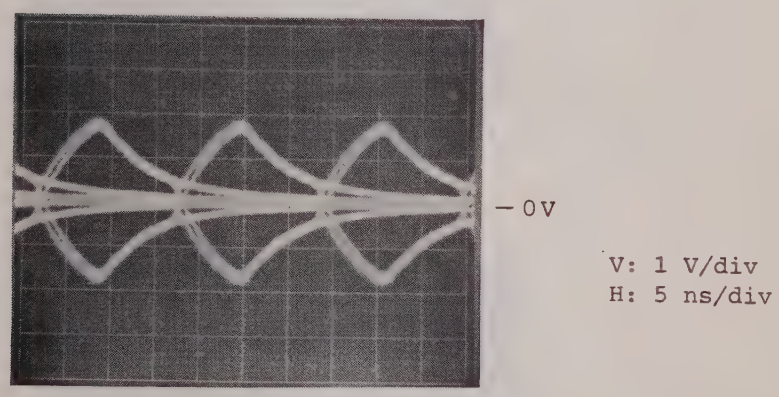

Fig. 3-23 DS-2 OUTPUT

(c) Checking DS-1C output

Panel setting

CLOCK	: DS-1C
JITTER MODULATION:	OFF
FUNCTION SWITCH A (Rear Panel):	All "0"

[Step 1]

Check the waveform at ❶ using an oscilloscope.

The waveform shown in Fig. 3-24 is normal. Also, check the frequency at ❶ using a frequency counter.

If the frequency is within the range of 3.151969 to 3.152031 MHz is normal.

If it is normal, proceed to the next step.

If the frequency is abnormal, make the following adjustment.

Adjustemnt

Adjust C17 to match the frequency.

If the frequency is abnormal after the above adjustment has been made, troubleshoot the circuits related to X3 to ❶.

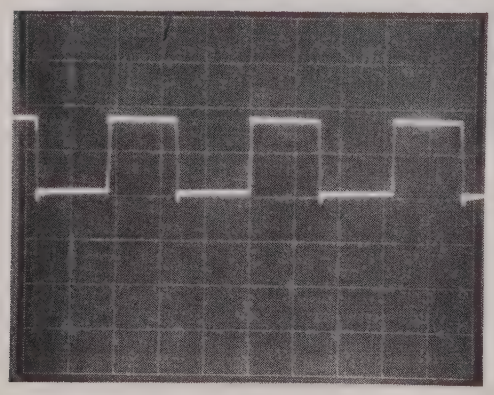

—0 V

V: 2 V/div
H: 100 ns/div

Fig. 3-24 Waveform at ❶

[Step 2]

Check the waveforms at ⓮ and ⓯ using an oscilloscope.

The waveforms shown in Fig. 3-25 are normal.
If they are normal, proceed to the next step.

If they are abnormal, troubleshoot the circuit related to ❶ to ⓮ and ⓯.

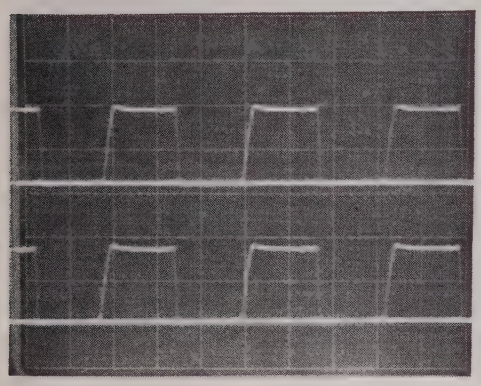

V: 1 V/div
H: 100 ns/div

Fig. 3-25 Waveforms at ⓮ and ⓯

[Step 3]

Check the DS-1C output waveform.

Connect as shown in Fig. 3-22.

The waveform shown in Fig. 3-26 is normal.
If the waveform is normal, DS-1C is normal.

If it is abnormal, make the following adjustment.

Adjustment

Adjust the output level at R293 while checking the output waveform.

If the waveform is abnormal after the above adjustment has been made, troubleshoot the circuits related to ⓮ and ⓯ to J7.

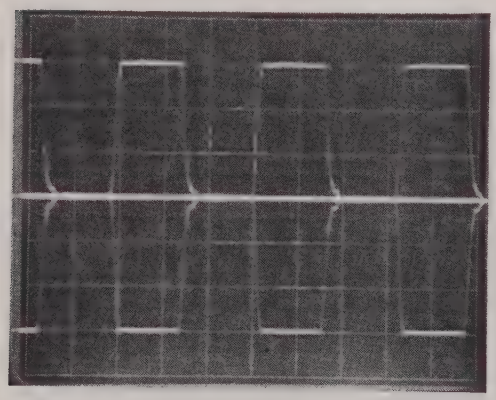

—0 V

V: 1 V/div
H: 100 ns/div

Fig. 3-26 DS-1C OUTPUT

(d) Checking DS-1 output

Panel setting

CLOCK	: DS-1
JITTER MODULATION:	OFF
FUNCTION SWITCH A (Rear panel):	All "0"

[Step 1]

Check the waveform at ❶ using an oscilloscope probe.

The waveform shown in Fig. 3-27 is normal.

Also, check the frequency at ❶ using a frequency counter.

A frequency in the range of 1.543985 to 1.544015 MHz is normal.

If it is normal, proceed to the next step.

If the frequency is abnormal, make the following adjustment.

Adjustment

Adjust C18 to match the frequency.

If the frequency is abnormal after the above adjustment has been made, troubleshoot the circuits related to X4 to ❶ .

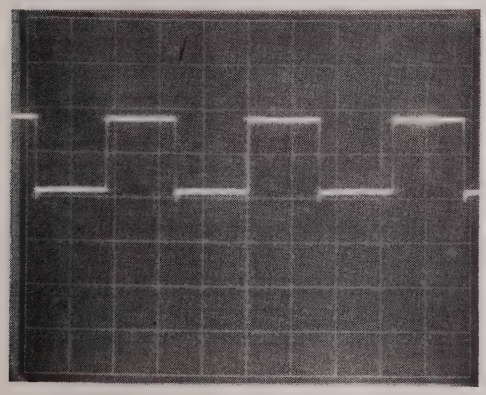

Fig. 3-27 Waveform at ❶

[Step 2]

Check the waveforms at ⓮ and ⓯ using an oscilloscope.

The waveform shown in Fig. 3-28 are normal.

If they are normal, proceed to the next step.

If they are abnormal, troubleshoot the circuits 1 to ⓮ and ⓯.

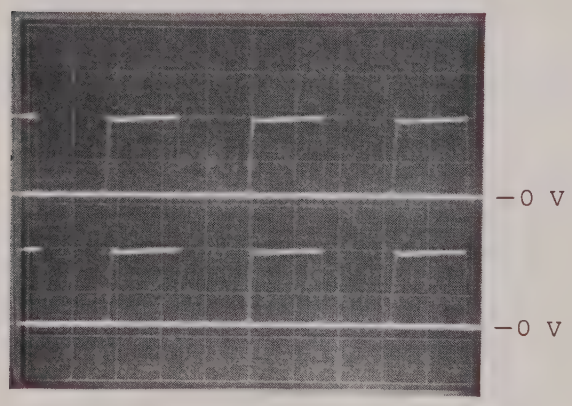

V: 1 V/div
H: 200 ns/div

Fig. 3-28 Waveforms at ⓮ and ⓯

[Step 3]

Check the DS-1 output waveform.

Set-up as shown in Fig. 3-22.

The waveform shown in Fig. 3-29 is normal.

If the waveform is normal, DS-1 is normal.

If it is abnormal, make the following adjustment.

Adjustment

Adjust the output level at R293 while checking the output waveform.

If the waveform is abnormal after the above adjustment has been made, troubleshoot the circuits related to ⓮, ⓯ to J7.

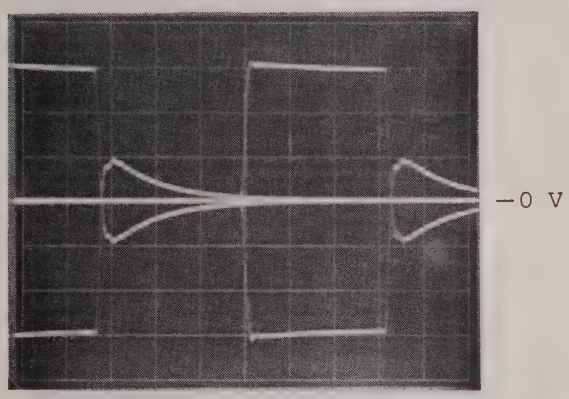

V: 1 V/div
H: 100 ns/div

Fig. 3-29 DS-1 OUTPUT

(e) Checking unipolar output

Panel setting

CLOCK	: DS-3
JITTER MODULATION:	OFF
UNIPOLAR OUTPUT LEVEL (Rear Panel):	+1/-1 V
FUNCTION SWITCH A (Rear Panel)	: All "0"

[Step 1]

Perform the same check as described in paragraph 3.5.3 (2) (a) [Step 1] and [Step 2].

[Step 2]

Check the waveforms and phases at ❼ and ❿ using an oscilloscope.

The waveforms and phases shown in Fig. 3-30 are normal.

If they are normal, proceed to the next step.

If they are abnormal, troubleshoot the circuits related to ❶ to ❿, and Q101.

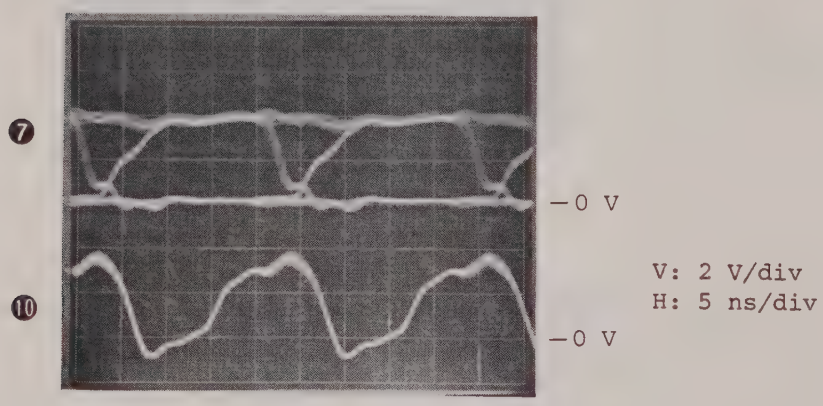

Fig. 3-30 Waveforms at ❼ and ❿

[Step 3]

Check the waveforms at ⓫, ⓬, and ⓭ using an oscilloscope probe.

The waveforms shown in Fig. 3-31 are normal.

If they are normal, proceed to the next step.

If they are abnormal, troubleshoot the circuits related to Q102, and Q103.

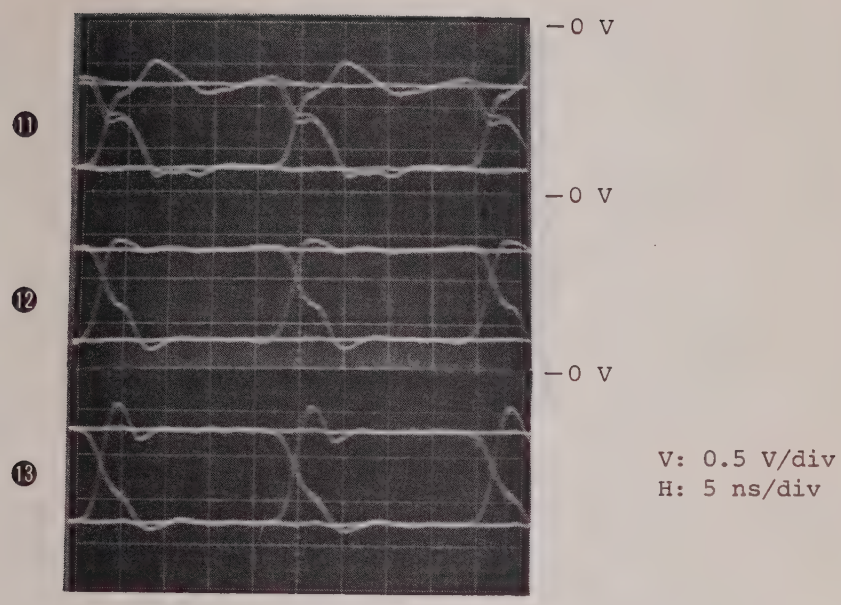

Fig. 3-31 Waveforms at ⓫, ⓬, and ⓭

[Step 4]

Check the waveform at ㉑ using an oscilloscope probe.

The waveform shown in Fig. 3-32 is normal.

If it is normal, proceed to the next step.

If it is abnormal, troubleshoot the circuits related to ❶ to ㉑.

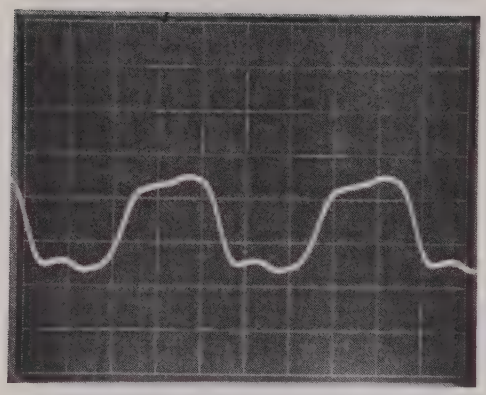

V: 0.5 V/div
H: 5 ns/div

Fig. 3-32 Waveform at ㉑

[Step 5]

Check the unipolar data output and unipolar clock output waveforms.

Connect as shown in Fig. 3-33.

The waveforms and phases shown in Fig. 3-34 are normal.

If they are normal, the unipolar data output and unipolar clock output (±1 V) are normal.

If they are abnormal, make the following adjustment.

Adjustment

1. Adjust the level, offset, and duty.

Table 3-7 Unipolar Output Adjustement

UNIPOLAR OUTPUT	LEVEL		OFFSET		DUTY		
	TTL	+1/-1 V	TTL	+1/-1 V	TTL	+1/-1 V	ECL
DATA (J5)	R295	R296	R301	R302		R365	
CLOCK (J6)	R298	R299	R304	R305		R361	R368

If the waveforms and phases are abnormal after the above adjustment has been made, troubleshoot the circuits related to J5 and J6.

2. If the phase difference T shown in Fig. 3-34 is not within 3.3 ns, adjust W1.

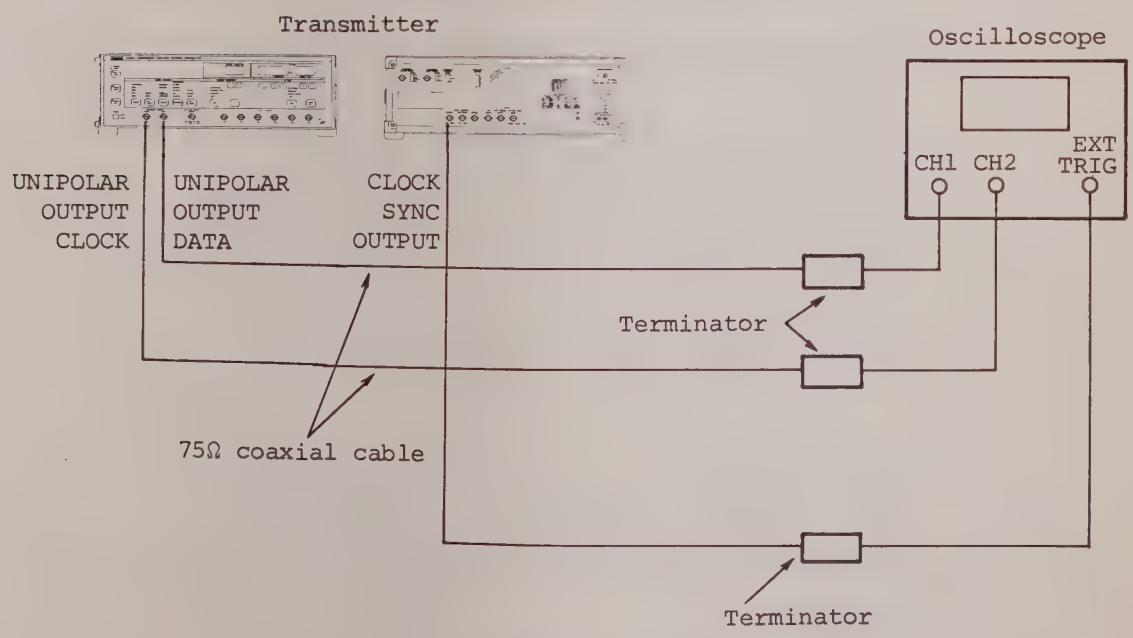

Fig. 3-33 Setup

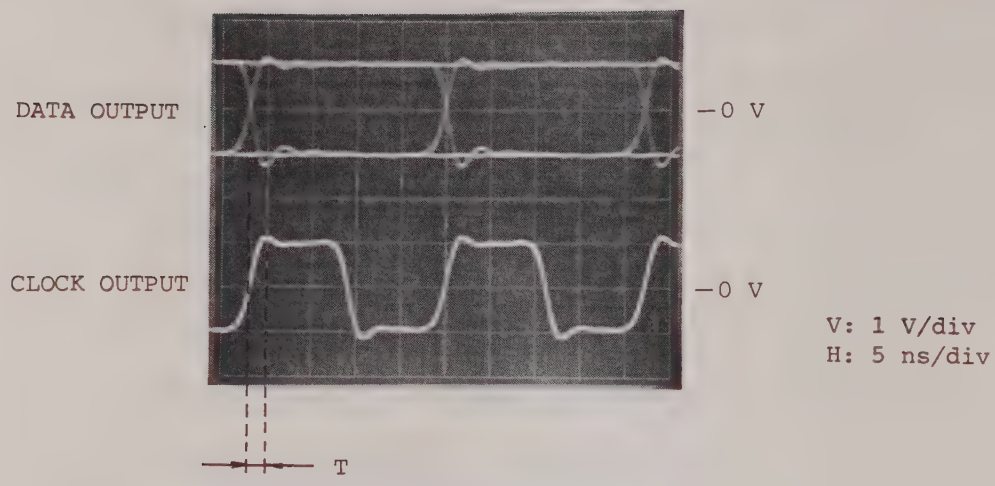

Fig. 3-34 Unipolar Output (+1/-1 V)

(f) Checking ERROR ADDITION

Panel setting

CLOCK	:	DS-3
FRAME	:	FRAMED OR UNFRAMED
ERROR ADDITION	:	ERROR RATE OR EXTERNAL
JUTTER MODULATION	:	OFF
FUNCTION SWITCH A (Rear Panel)	:	All "0"

[Step 1]

Set the ERROR ADDITION to ERROR RATE.

Check the frequency at ❾ using a frequency counter.

The value shown in Table 3-8 is normal.
If it is normal, proceed to the next step.

If it is abnormal, troubleshoot the circuits related to Q105 to ❾ and Q101.

Table 3-8 Frequency at ❾

ERROR RATE	Frame OFF	Frame ON
10^{-2}	447.360 kHz	451.879 kHz
10^{-3}	44.736 kHz	44.780 kHz
10^{-4}	4.473 kHz	4.474 kHz
10^{-5}	447 Hz	447 Hz
10^{-6}	44 Hz	44 Hz
10^{-7}	4 Hz	4 Hz
10^{-8}	0.4 Hz	0.4 Hz

[Step 2]

Set the ERROR ADDITION to EXTERNAL.

Connect as shown in Fig. 3-35.

Check the frequency at ❾ using a frequency counter.

If the frequency matches the frequency of the pulse generator, it is normal.

If it is normal, the EXTERNAL ERROR is normal.

If it is abnormal, troubleshoot the circuits related to J3-6 to ❾ and Q101.

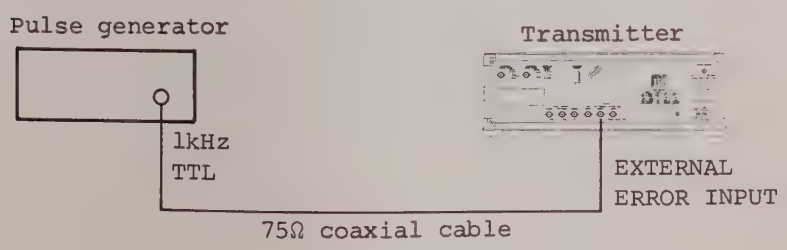

Fig. 3-35 Setup

(g) Checking X-bit input

Check the voltage at ⓴ using an oscilloscope probe.

If the voltage is as shown in Table 3-9, the X-bit input is normal.

Table 3-9 X-bit Input

Panel setting		Level at ⓴
CLOCK	FRAME	
DS-3	FRAMED	H
DS-2	FRAMED	H
DS-1C	FRAMED	H
DS-1	FRAMED D4	L
DS-1	FRAMED ESF	H

H: +2 V to +5 V
L: +0.5 V or less

If it is abnormal, troubleshoot the circuits related to J3-4 to ⓴ and Q101.

(h) Checking external clock

Panel setting

CLOCK	:	EXTERNAL
JITTER MODULATION	:	OFF
EXTERNAL CLOCK INPUT LEVEL (Rear Panel)	:	0.7 to 1.5 Vp-p
FUNCTION SWITCH A (Rear Panel)	:	All "0"

Set-up as shown in Fig. 3-36.

Check the waveform at ❶ using an oscilloscope probe.

The waveform shown in Fig. 3-37 is normal.

If it is normal, EXTERNAL CLOCK is normal.

If it is abnormal, make the following adjustment.

Adjustment

Adjust R46 while checking the waveform at ❶.

If the waveform is abnormal after the above adjustment has been made, troubleshoot the circuits related to J2-3 to ❶.

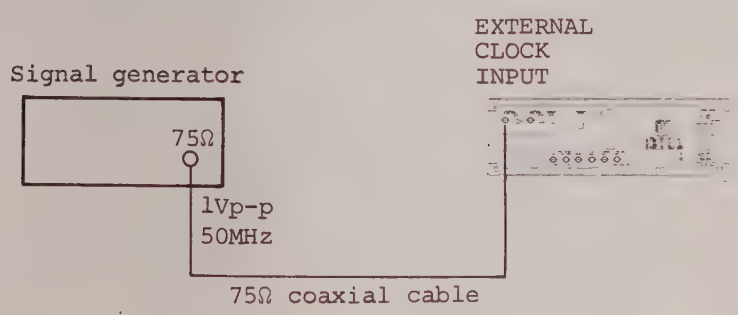

Fig. 3-36 Setup

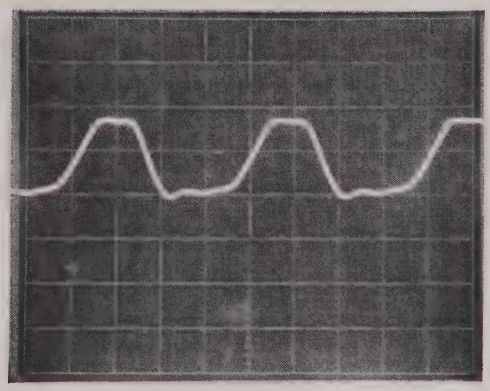

—0 V

V: 2 V/div
H: 5 ns/div

Fig. 3-37 Waveform at ❶ (External clock)

(i) Checking JITTER MODULATION (Only when OPT 01 mounted)

Panel setting

CLOCK	:	DS-3
JITTER MODULATION	:	EXTERNAL
FUNCTION SWITCH A (Rear Panel)	:	All "0"

[Step 1]

Check the waveform at ❷ using an oscilloscope.

The waveform shown in Fig. 3-38 is normal.

If it is normal, proceed to the next step.

If it is abnormal, troubleshoot the circuits related to X1 to ❷.

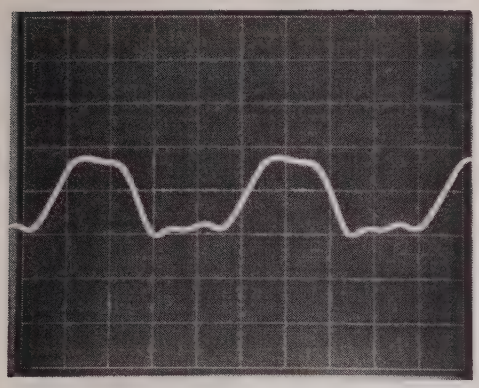

V: 2 V/div
H: 5 ns/div

Fig. 3-38 Waveform at ❷

[Step 2]

Check the waveform at ❹ using an oscilloscope.

The waveform shown in Fig. 3-39 is normal.

If it is normal, proceed to the next step.

If it is abnormal, troubleshoot the circuits related to J14-2 to ❹ .

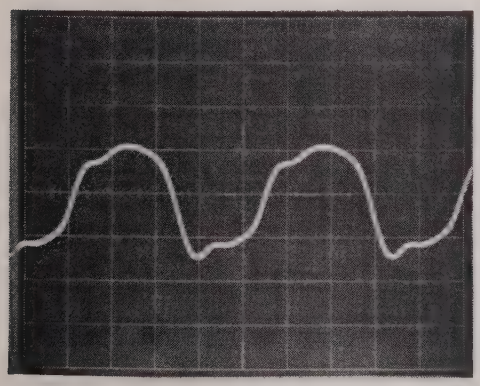

V: 2 V/div
H: 5 ns/div

Fig. 3-39 Waveform at ❹

[Step 3]

Check the waveform at ㉒ using an oscilloscope.

The waveform shown in Fig. 3-40 is normal.

If it is normal, JITTER MODULATION is normal.

If it is abnormal, troubleshoot the circuits related to J15-1 to Q106.

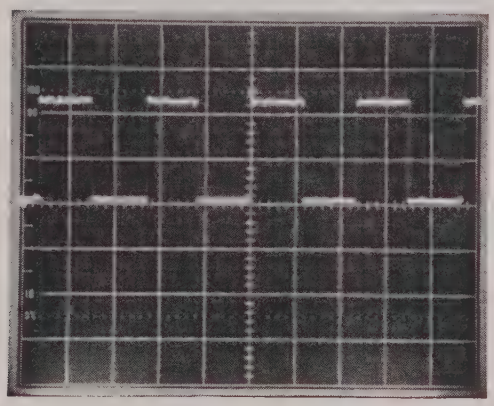

V: 2 V/div
H: 500 ms/div

Fig. 3-40 Waveform at ㉒

(j) Checking EXTERNAL DATA (Only when OPT 01 mounted)

Panel setting

CLOCK	:	EXTERNAL
PATTERN	:	EXTERNAL
JITTER MODULATION	:	EXTERNAL
FUNCTION SWITCH A (Rear Panel)	:	All "0"
EXTERNAL CLOCK INPUT LEVEL	:	ECL
EXTERNAL DATA INPUT LEVEL	:	ECL

[Step 1]

Connect as shown in Fig. 3-41.

Check the waveform at ❸ using an oscilloscope.

The waveform shown in Fig. 3-42 is normal.

If it is normal, proceed to the next step.

If it is abnormal, troubleshoot the circuits related to J2-6 to ❸.

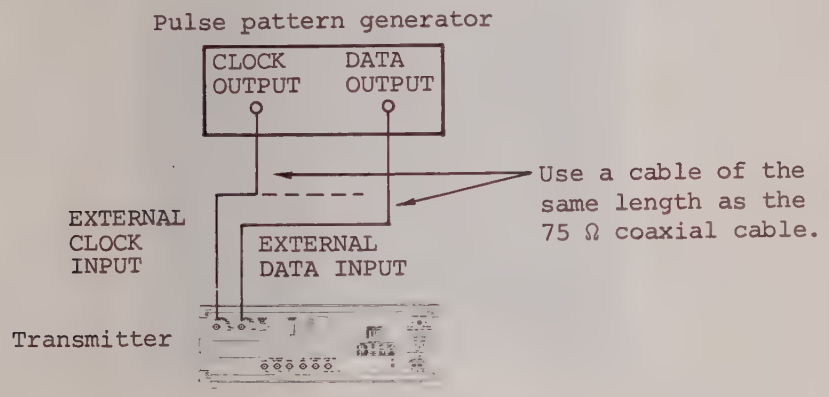

Fig. 3-41 Setup

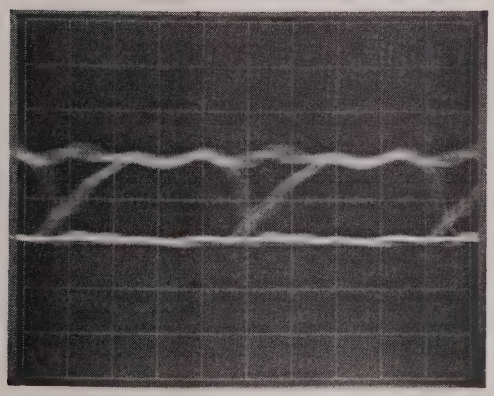

V: 2 V/div
H: 5 ns/div

Fig. 3-42 Waveform at ❸

[Step 2]

Check the waveform at ❺ using an oscilloscope.

The waveform shown in Fig. 3-43 is normal.

If it is normal, EXTERNAL DATA is normal.

If it is abnormal, troubleshoot the circuits related to ❸ to ❺.

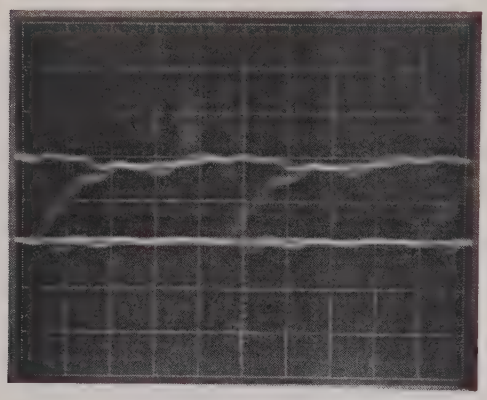

—0 V

V: 2 V/div
H: 5 ns/div

Fig. 3-43 Waveform at ❺

(k) Checking control signals

Panel setting

CLOCK	:	DS-3
FRAME	:	FRAMED
PATTERN	:	PRBS
DS-3 LEVEL	:	DSX-3
ERROR ADDITION	:	OFF
JITTER MODULATION	:	OFF
FUNCTION SWITCH A (Rear Panel)	:	All "0"

Check the voltage at ㉓ using an oscilloscope probe.

The voltage shown in Table 3-10 is normal.

If it is normal, the control signal is normal.

Table 3-10 Voltage at ㉓

Test point	Voltage at ㉓
Q117-4	H
Q117-3	H
Q117-2	L
Q117-1	L
Q117-40	H
Q117-39	H
Q117-38	L
Q117-18	H
Q117-19	H
Q117-20	H
Q117-21	H
Q117-22	H
Q117-23	L
Q117-24	L
Q117-25	L
Q117-14	L
Q117-15	L
Q117-16	H
Q117-17	L
Q117-13	L
Q117-12	H
Q117-11	L
Q117-10	L

H: +2 V to +5 V
H: +0.5 V or less

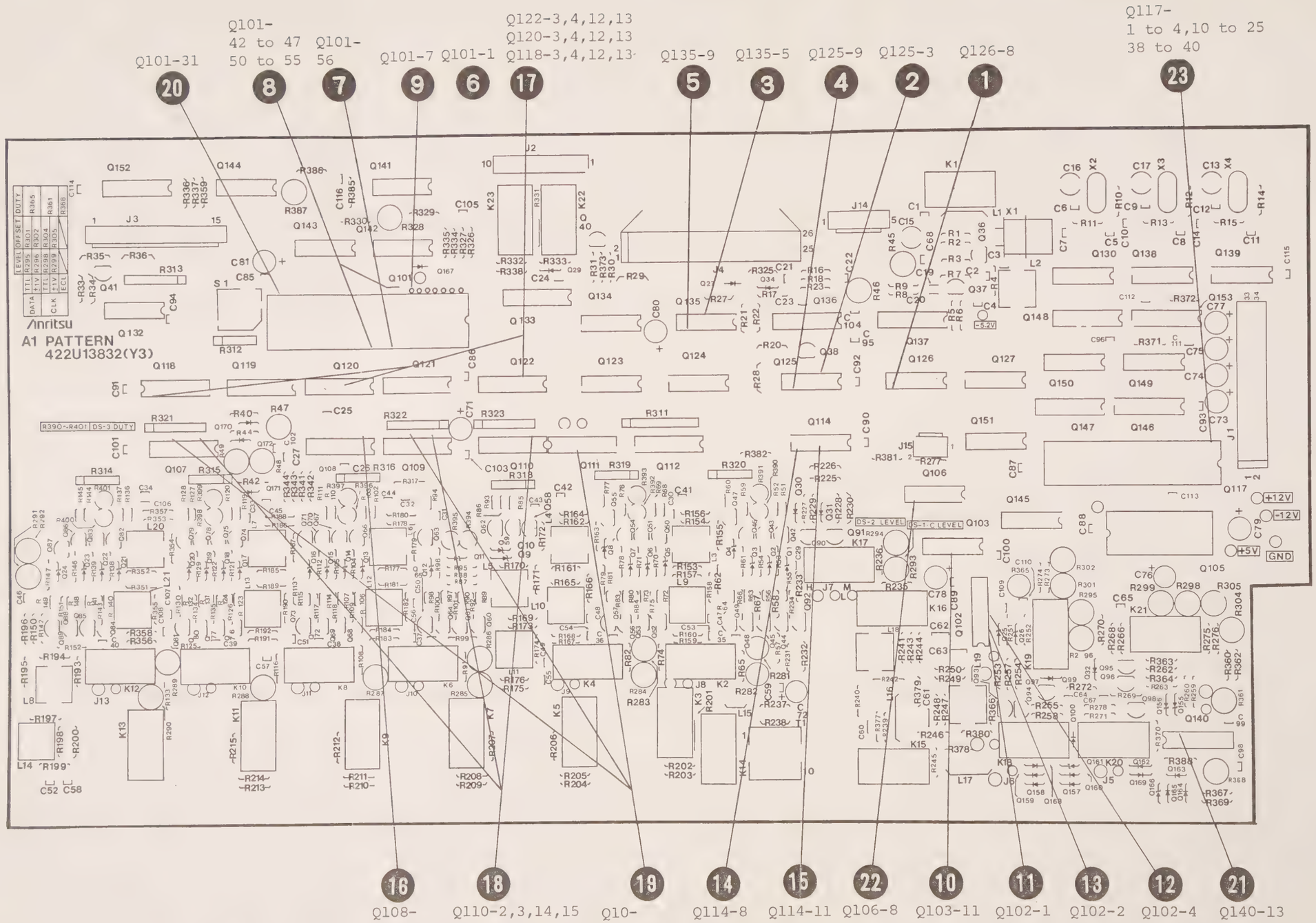

Fig. 3-44 PATTERN GENERATOR
PC Board 3
Parts Layout

43W36035 1/6

APPLICATION

REVISIONS

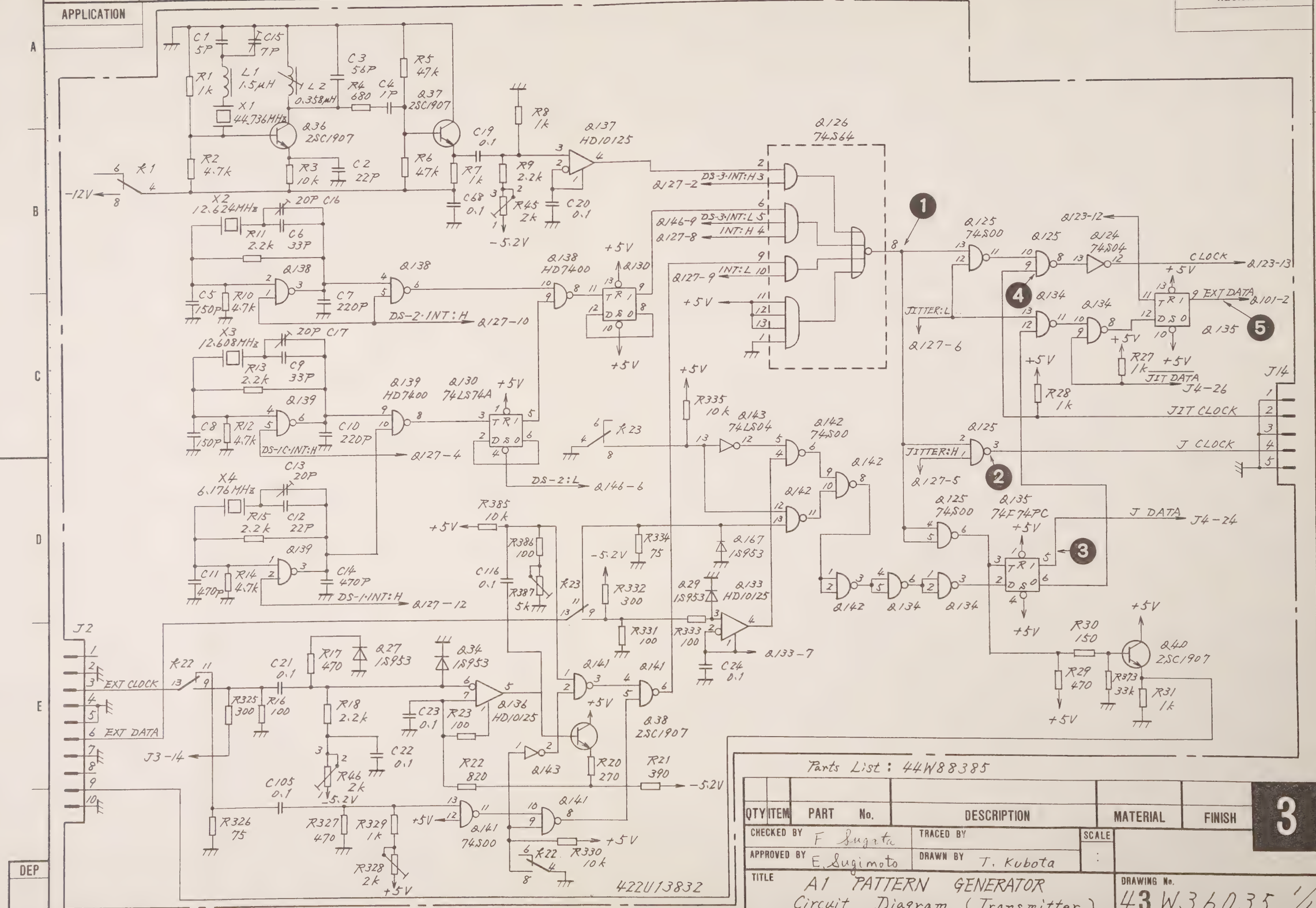

Parts List : 44W88385

QTY	ITEM	PART No.	DESCRIPTION	MATERIAL	FINISH

CHECKED BY F. Sugata | TRACED BY | SCALE

APPROVED BY E. Sugimoto | DRAWN BY T. Kubota

TITLE A1 PATTERN GENERATOR Circuit Diagram (Transmitter)

DRAWING No. 43W36035 1/6

3

DEP

No. D023-1985.08

ANRITSU CORP.

3-63/3-64

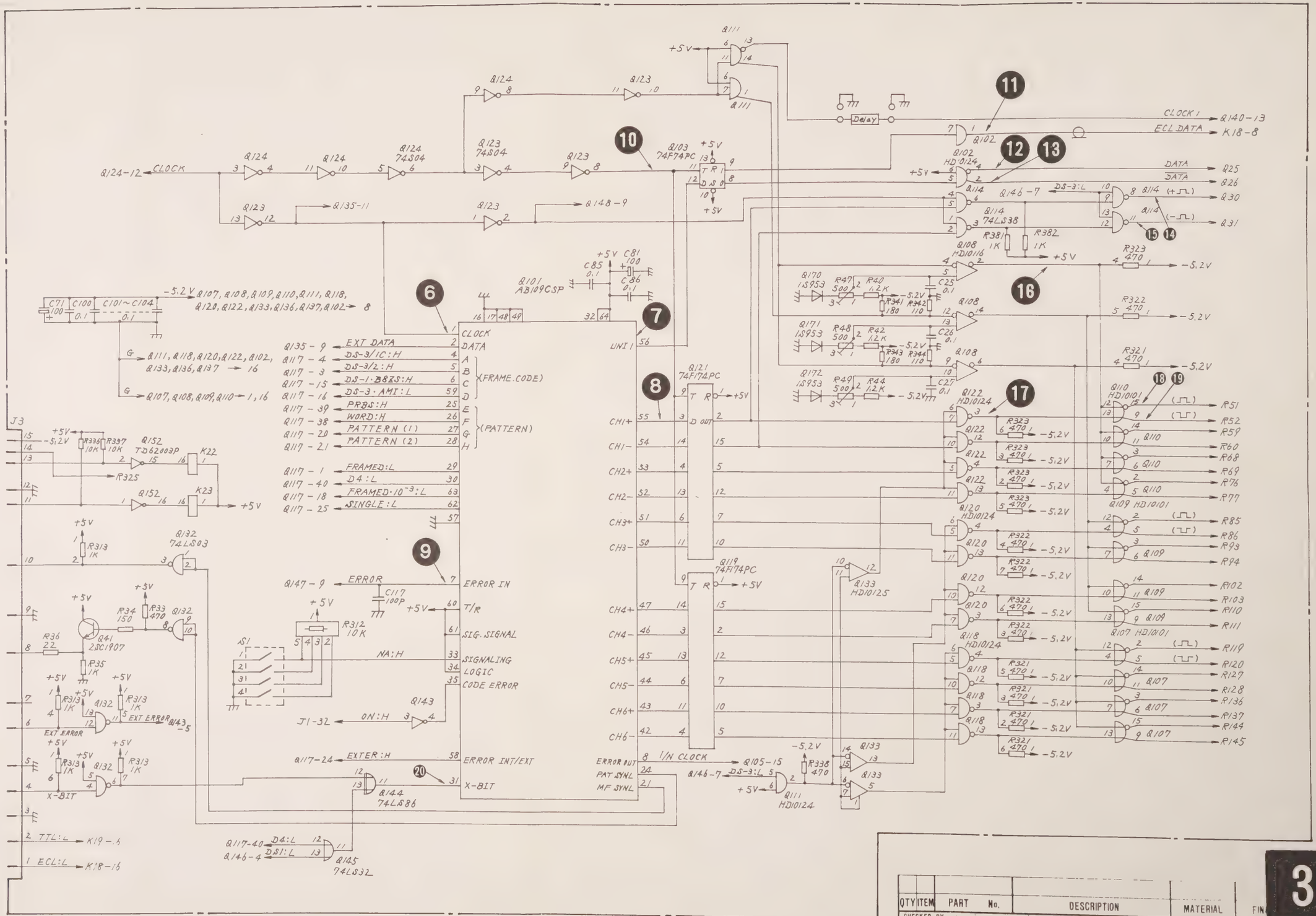

QTY	ITEM	PART No.	DESCRIPTION	MATERIAL	FIN

CHECKED BY F. Sugeta
TRACED BY
SCALE
APPROVED BY E. Sugimoto
DRAWN BY T. Kubota
M-1

TITLE A1 PATTERN GENERATOR Circuit Diagram. (Transmitter)

DRAWING No. 43W36035 2/6

3

43W36035 3/6

APPLICATION

REVISIONS

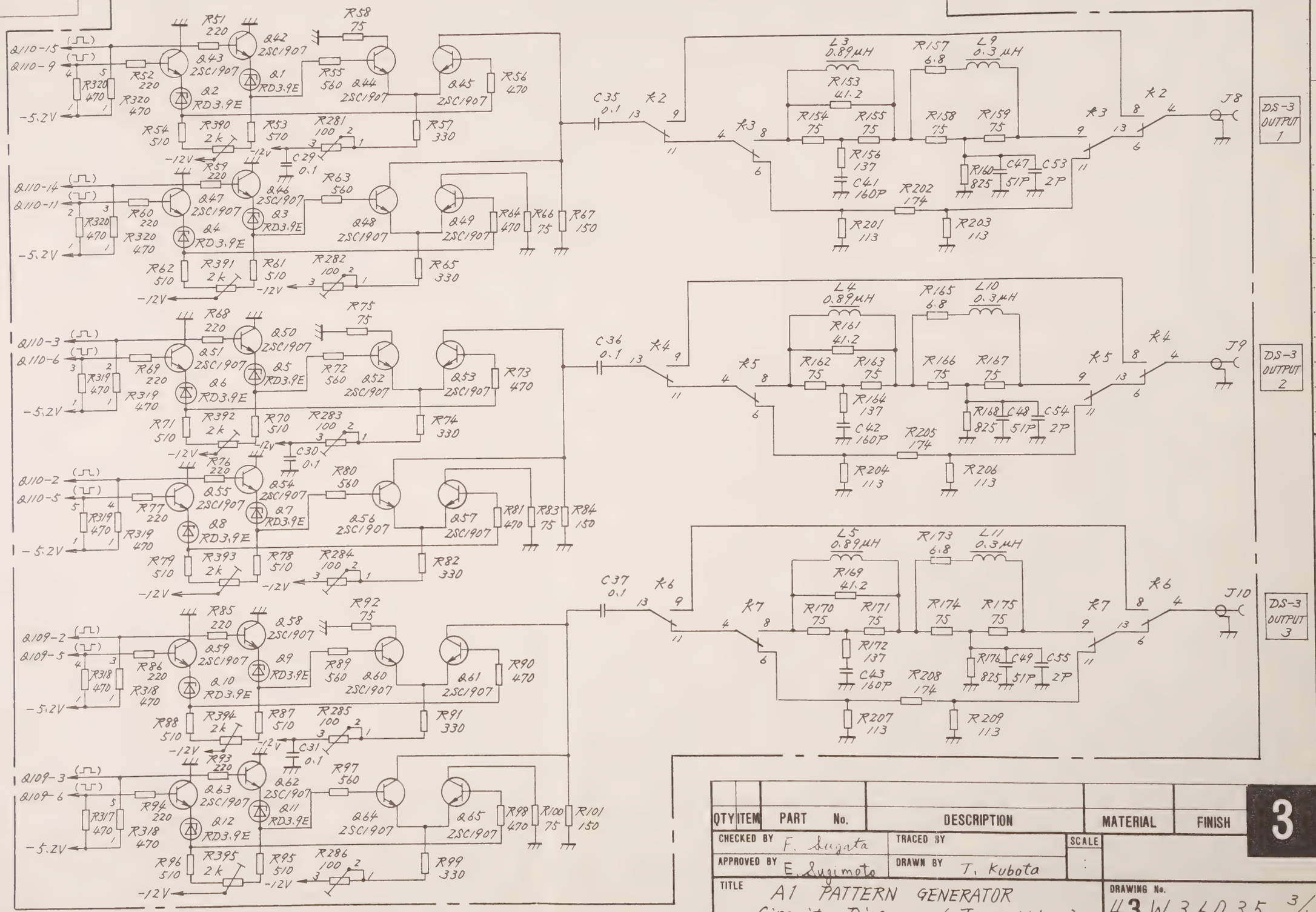

QTY	ITEM	PART No.	DESCRIPTION	MATERIAL	FINISH

CHECKED BY F. Sugata
APPROVED BY E. Sugimoto
TRACED BY
DRAWN BY T. Kubota
SCALE

TITLE A1 PATTERN GENERATOR
Circuit Diagram (Transmitter)

DRAWING No. 43W36035 3/6

3

DEP

No. 0023-1985.08

ANRITSU CORP.

3-67/3-68

43W36035 3/6

APPLICATION

REVISIONS

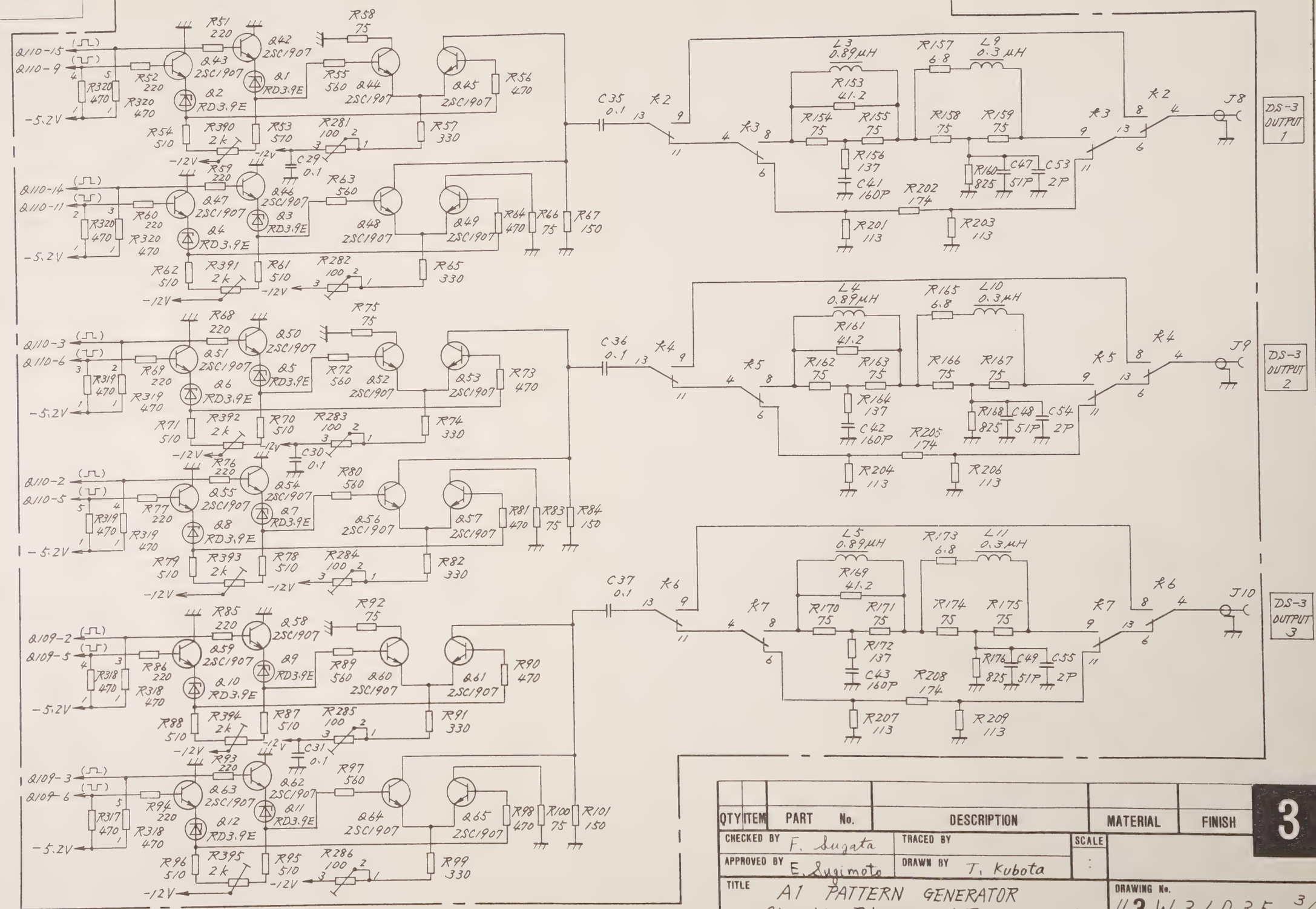

QTY	ITEM	PART No.	DESCRIPTION	MATERIAL	FINISH

CHECKED BY F. Sugata
APPROVED BY E. Sugimoto
TRACED BY
DRAWN BY T. Kubota
SCALE :

TITLE A1 PATTERN GENERATOR
Circuit Diagram (Transmitter)

DRAWING No. 43W36035 3/6

3

DEP

No. D023-1985.08

ANRITSU CORP.

3-67/3-68

43W36035 5/6

APPLICATION

REVISIONS

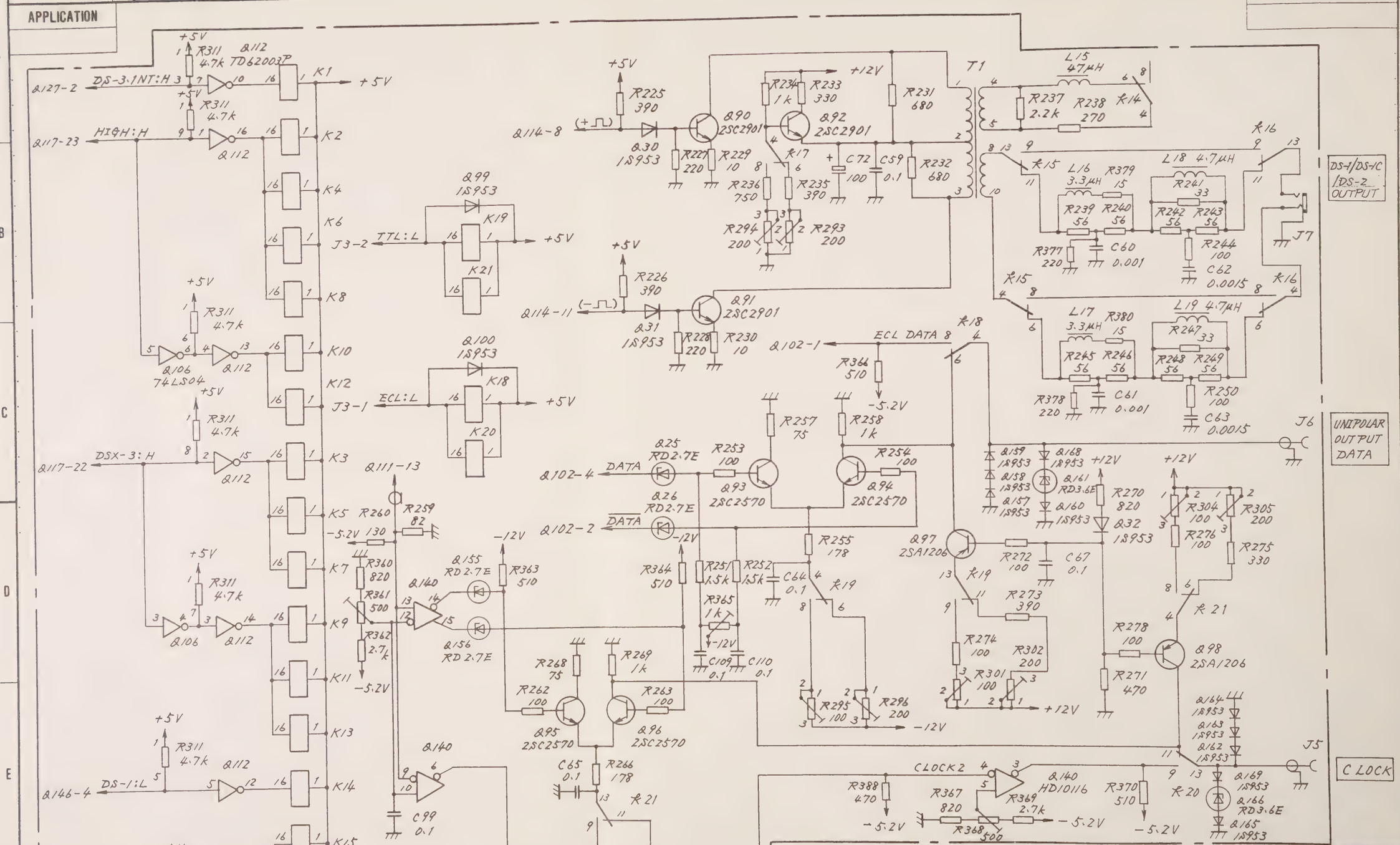

QTY	ITEM	PART No.	DESCRIPTION	MATERIAL	FINISH

CHECKED BY F. Sugata | TRACED BY | SCALE

APPROVED BY E. Sugimoto | DRAWN BY T. Kubota

TITLE A1 PATTERN GENERATOR Circuit Diagram (Transmitter)

DRAWING No. 43W36035 5/6

3

DEP

No. 0023-1985.06

ANRITSU CORP.

3-71/3-72

APPLICATION

REVISIONS

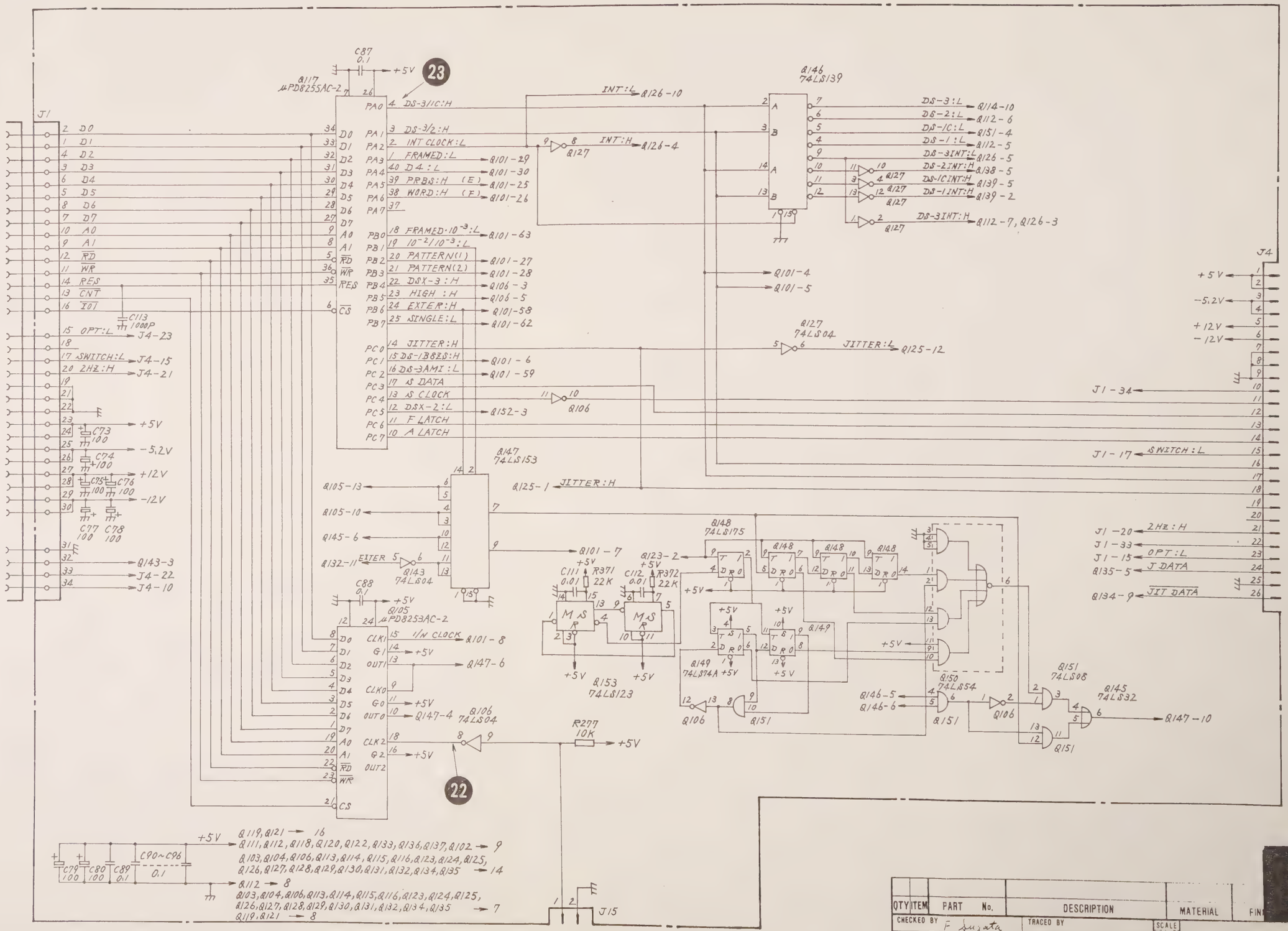

QTY	ITEM	PART No.	DESCRIPTION	MATERIAL	FIN

CHECKED BY F. Sugata — TRACED BY — SCALE

APPROVED BY E. Sugimoto — DRAWN BY T. Kubota

TITLE A1 PATTERN GENERATOR Circuit Diagram. (Transmitter)

DRAWING No. 43W36035 6/6

3

DEP

No 0021 1985.08

ANRITSU CORP. 3-73/3-74

3.5.4 A3 T-DISPLAY PC board 4

(1) Circuit Description

Table A3 T-DISPLAY circuit consists of a detection circuit of the front-panel switching status, and a driver circuit for the LEDs and the digital display.

(2) Troubleshoot and adjustment

[Step 1]

Check the waveforms at ❶ using an oscilloscope.

The waveform shown in Fig. 3-45 is normal.

If they are normal, proceed to the next step.

If they are abnormal, troubleshoot the circuit related to Q1.

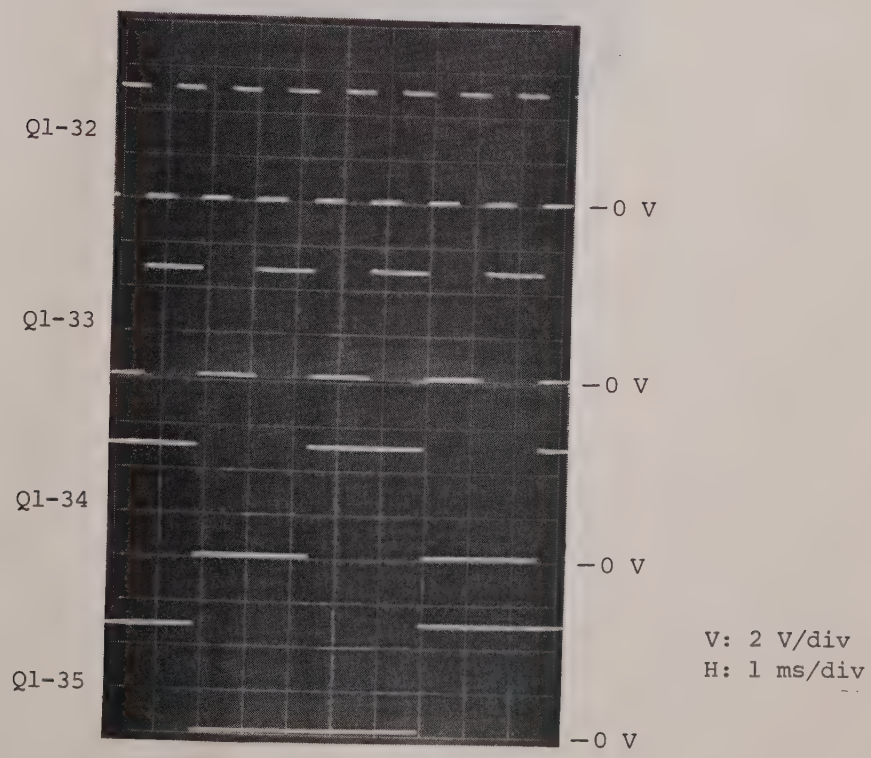

Fig. 3-45 Waveforms at ❶

[Step 2]

Check the waveform at ❷ using an oscilloscope probe when the [CLOCK] key is pressed.

The waveform shown in Fig. 3-46 is normal.

If it is normal, A3 is normal.

If it is abnormal, troubleshoot the circuits related to Q1 and S4.

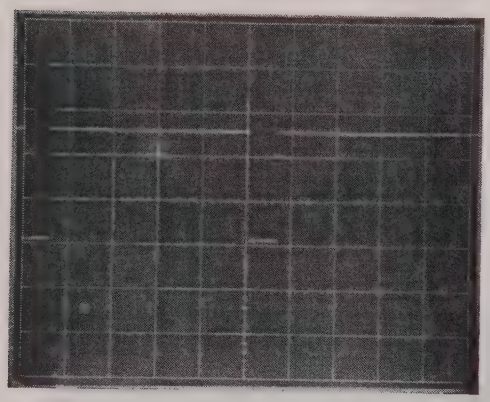

—0 V

V: 2 V/div
H: 1 ms/div

Fig. 3-46 Waveform at ❷

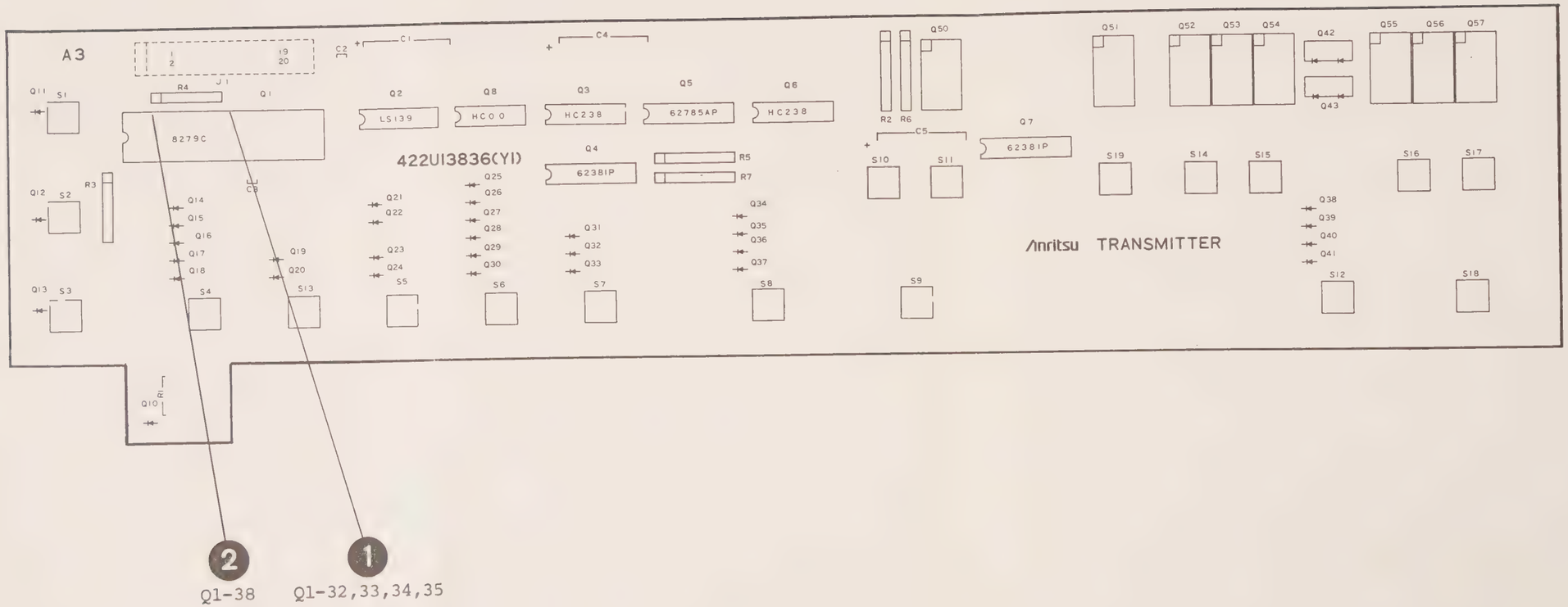

Fig. 3-47 T-DISPLAY PC Board 4
Parts Layout

(3-77 blank)/3-78

43W36037 1/2

APPLICATION

REVISIONS

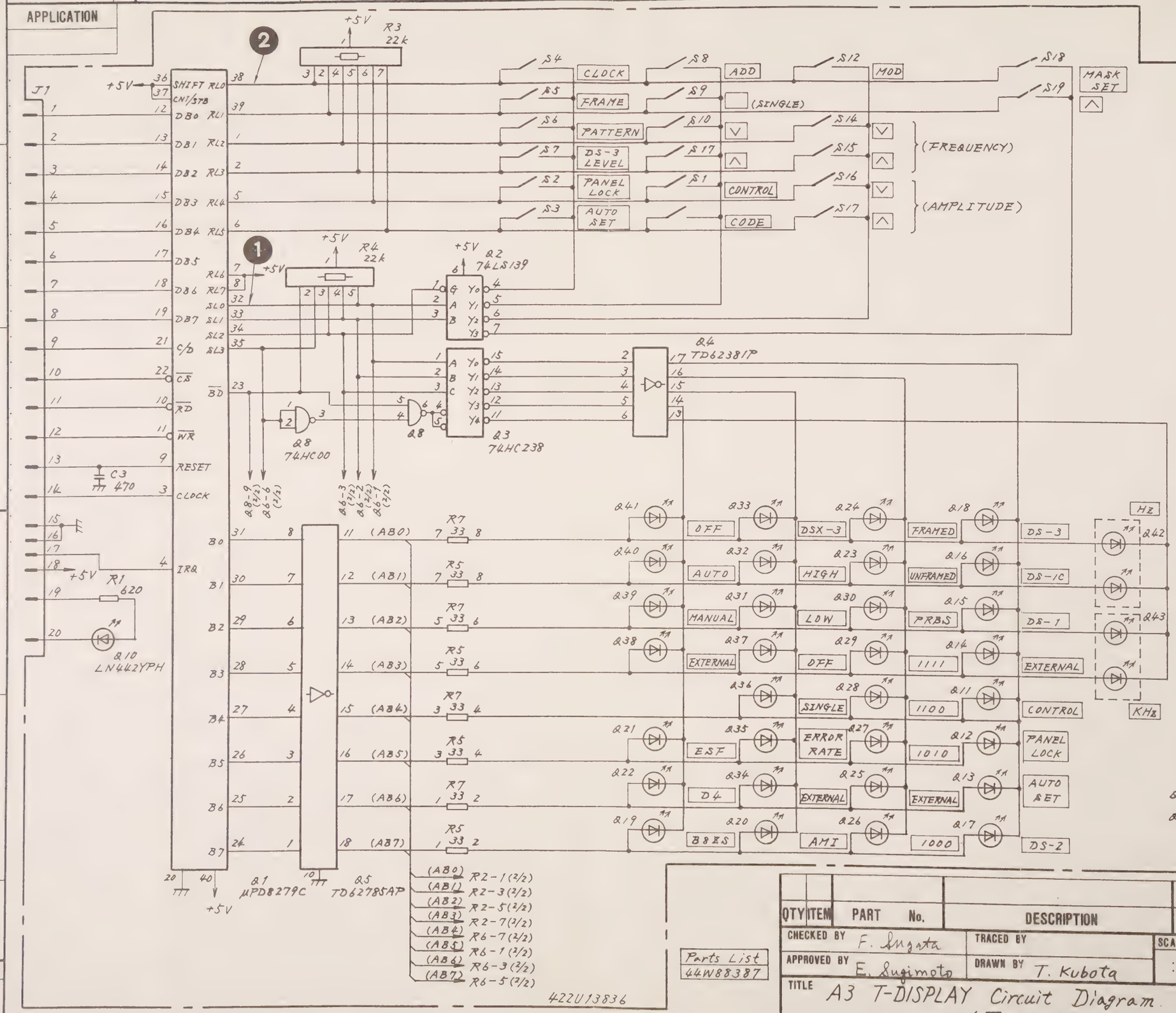

Parts List 44W88387

QTY	ITEM	PART No.	DESCRIPTION	MATERIAL	FINISH

CHECKED BY F. Sugata
APPROVED BY E. Sugimoto
TRACED BY
DRAWN BY T. Kubota
SCALE :

TITLE A3 T-DISPLAY Circuit Diagram (Transmitter)

DRAWING No. 43W36037 1/2

4

DEP

ANRITSU CORP.

3-79/3-80

No. D023-1985.08

43W36037 2/2

APPLICATION

REVISIONS

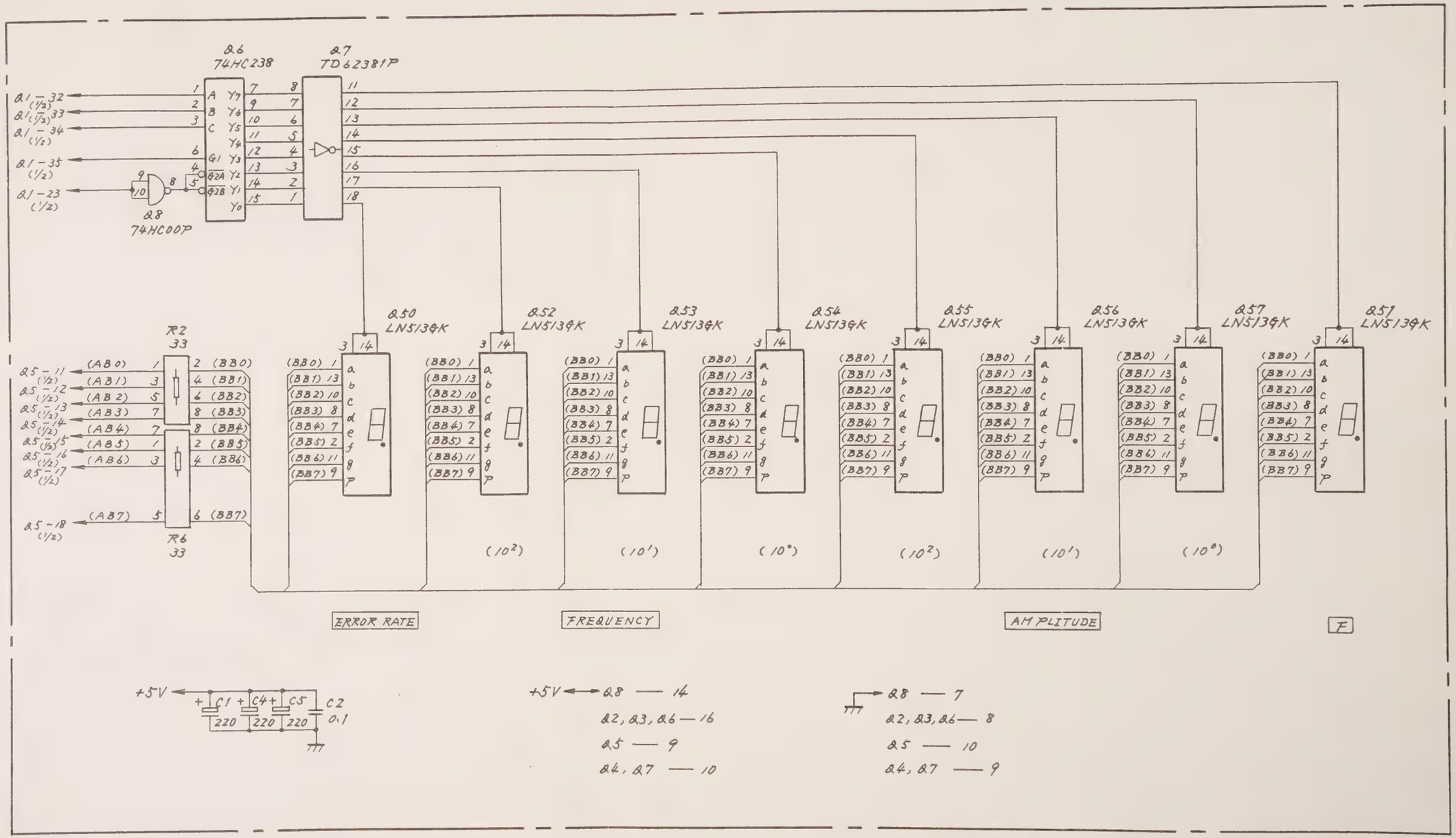

QTY	ITEM	PART No.	DESCRIPTION	MATERIAL	FINISH

4

CHECKED BY F. Sugata | TRACED BY | SCALE

APPROVED BY E. Sugimoto | DRAWN BY T. Kubota

TITLE A3 T-DISPLAY Circuit Diagram. (Transmitter)

DRAWING No. 43W36037 2/2

DEP

No. 0023-1985.08

ANRITSU CORP.

3-81/3-82

3.5.5 A4 JITTER MODULATION PC board 5 (OPT 01)

(1) Circuit description

Figure 3-49 is the block diagram of this circuit.

The A4 JITTER MODULATION circuit consists of a frequency divider PD (phase-detection) circuit, LPF circuit, VCO circuit, jitter counting circuit, and external data input circuit. The frequency-division circuit divides the clock signal by 10 for DS-3, and by 6 for DS-2/1C/1. The PD circuit detects the phase difference between the reference clock signal and the jitter-modulated clock signal.

The LPF circuit removes the jitter modulation signal.

The VCO circuit generates the jitter-modulated clock signal. The counting circuit detects the jitter and sends a pulse to the A2 T-CONTROL circuit to display the amount of jitter.

The jitter addition circuit adds jitter to the external data signal.

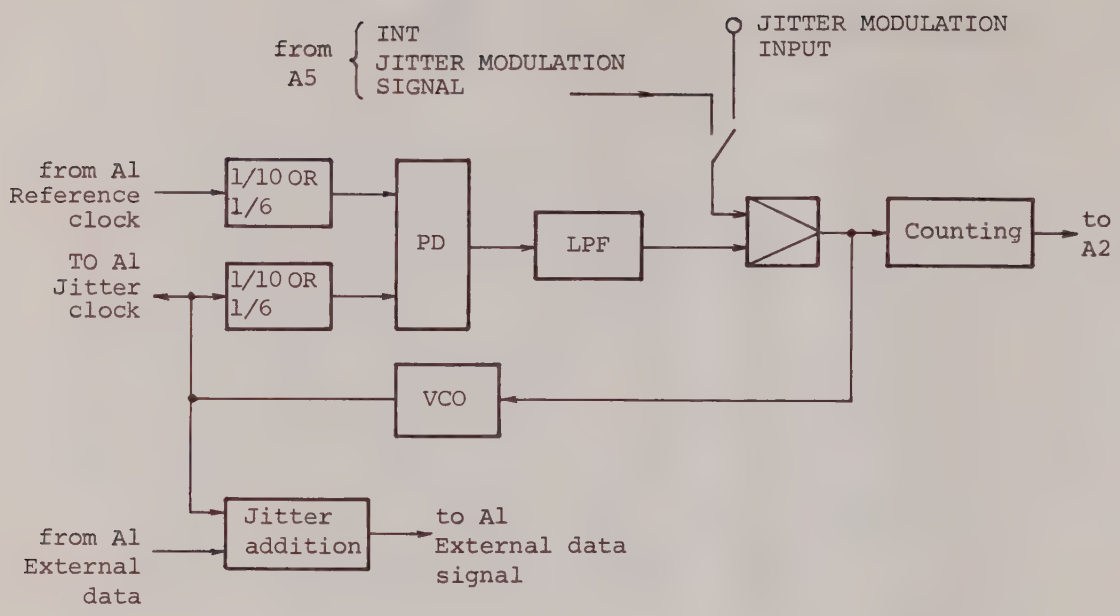

Fig. 3-48 A4 JITTER MODULATION Block Diagram

(2) Troubleshooting and adjustment

Panel setting

CLOCK	:	DS-3
JITTER MODULATION	:	MANUAL
FREQUENCY	:	500 Hz
AMPLITUDE	:	4 UIp-p

[Step 1]

Check the waveforms at ❶ using an oscilloscope probe.

The waveforms shown in Fig. 3-49 are normal.

If they are normal, proceed to the next step.

If they are abnormal, troubleshoot the circuit related to ❶.

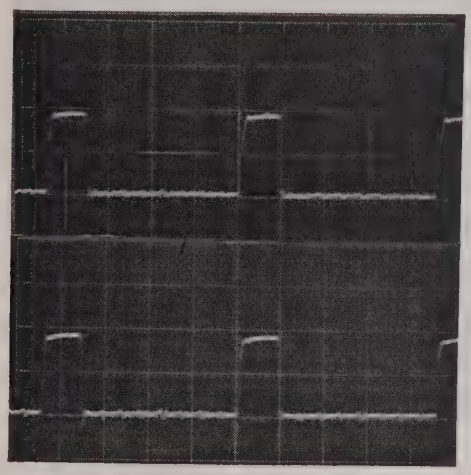

Fig. 3-49 Waveforms at ❶

[Step 2]

Check the waveforms at ❷, ❸ and ❹ using an oscilloscope.

The waveforms shown in Fig. 3-50 are normal.

If they are normal, proceed to the next step.

If they are abnormal, troubleshoot the circuits related to ❶ to ❷, and ❶ to ❸ and ❹.

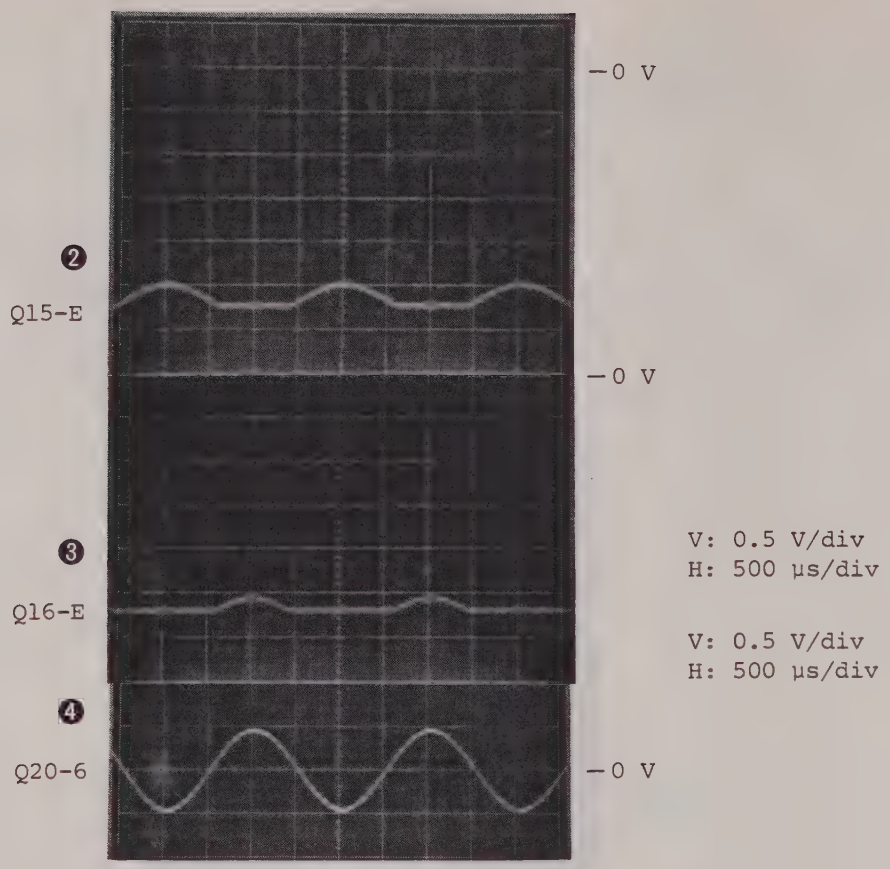

Fig. 3-50 Waveforms at ❷ , ❸ and ❹

[Step 3]

Check the waveform at ❺ using an oscilloscope.

The waveform shown in Fig. 3-51 is normal.

If it is normal, proceed to the next step.

If it is abnormal, make the following adjustment.

Adjustment

Adjust R60, R61, R62, or R63 so that the waveform at ❺ is as shown in Fig. 3-51.

CLOCK	DUTY
DS-3	R60
DS-2	R61
DS-1C	R62
DS-1	R63

If it is abnormal after the above adjustment has been made, troubleshoot the circuits related ❹ and ❺.

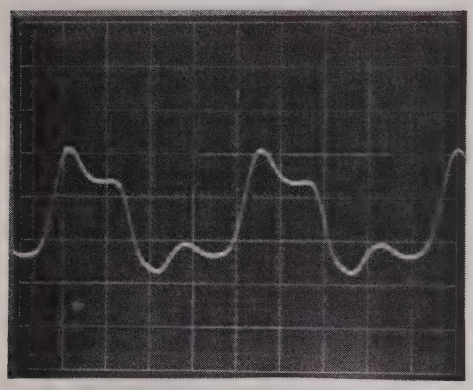

V: 0.5 V/div
H: 5 ns/div

Fig. 3-51 Waveform at ❺

[Step 4]

Check the waveform at ❻ using an oscilloscope. The waveform shown in Fig. 3-52 is normal.

If it is normal, proceed to the next step.

If it is abnormal, make the following adjustment.

Adjustment

Adjust the level at R78.

If the waveform is abnormal after the above adjustment has been made, troubleshoot the circuits related to J8-1 to ❻.

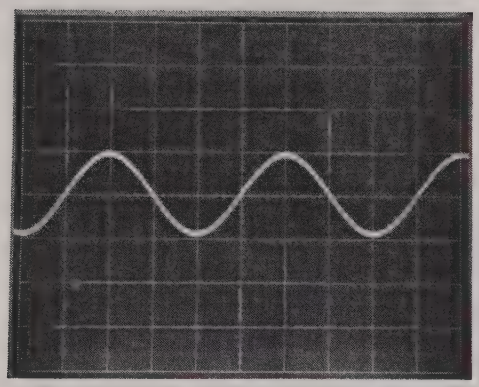

—0 V

V: 0.5 V/div
H: 500 μs/div

Fig. 3-52 Waveform at ❻

[Step 5]

Check the waveform at ❼ using an oscilloscope probe. The waveform shown in Fig. 3-53 is normal.

If it is normal, proceed to the next step.

If it is abnormal, troubleshoot the circuit related to ❼.

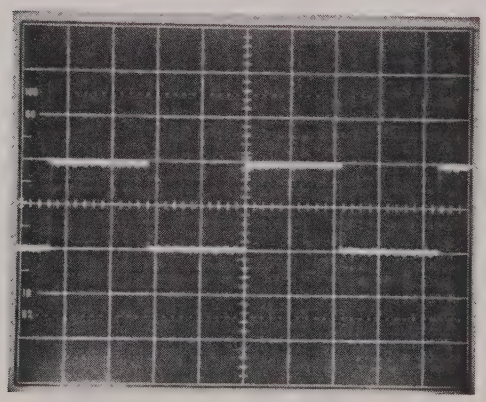

—0 V

V: 0.5 V/div
H: 100 ms/div

Fig. 3-53 Waveform at ❼

[Step 6]

Check the waveform at ❽ using an oscilloscope.

The waveform shown in Fig. 3-54 is normal.

If it is normal, proceed to the next step.

If it is abnormal, troubleshoot the circuit related to Q32 to ❽.

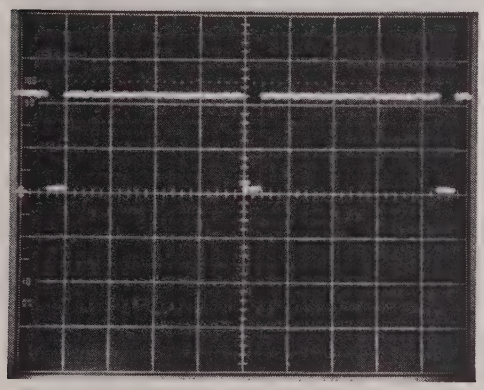

V: 2 V/div
H: 50 ms/div

Fig. 3-54 Waveform at ❽

[Step 7]

Set-up as shown in Fig. 3-41. Set the panel as described in paragraph 3.5.3. (2) (i).

Check the waveform at ❾ using an oscilloscope probe.

The waveform shown in Fig. 3-55 is normal.

If it is normal, proceed to the next step.

If it is abnormal, troubleshoot the circuit related to J1-24 to ❾.

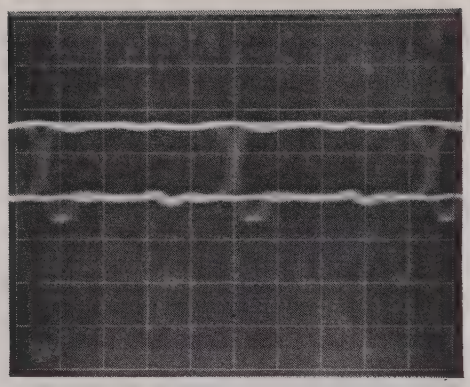

—0 V

V: 2 V/div
H: 5 ns/div

Fig. 3-55 Waveform at ❾

[Step 8]

Check the waveform at ❿ using an oscilloscope.

The waveform shown in Fig. 3-56 is normal.
If it is normal, A4 is normal.

If it is abnormal, troubleshoot the circuits related to ❾ to ❿.

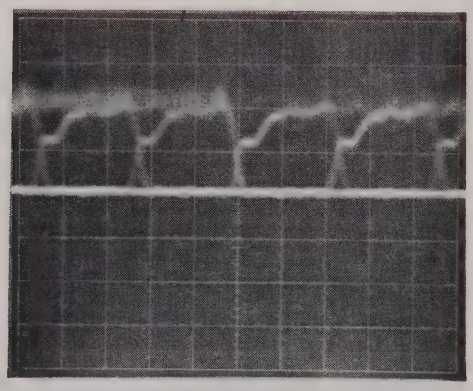

—0 V

V: 2 V/div
H: 10 ns/div

Fig. 3-56 Waveform at ❿

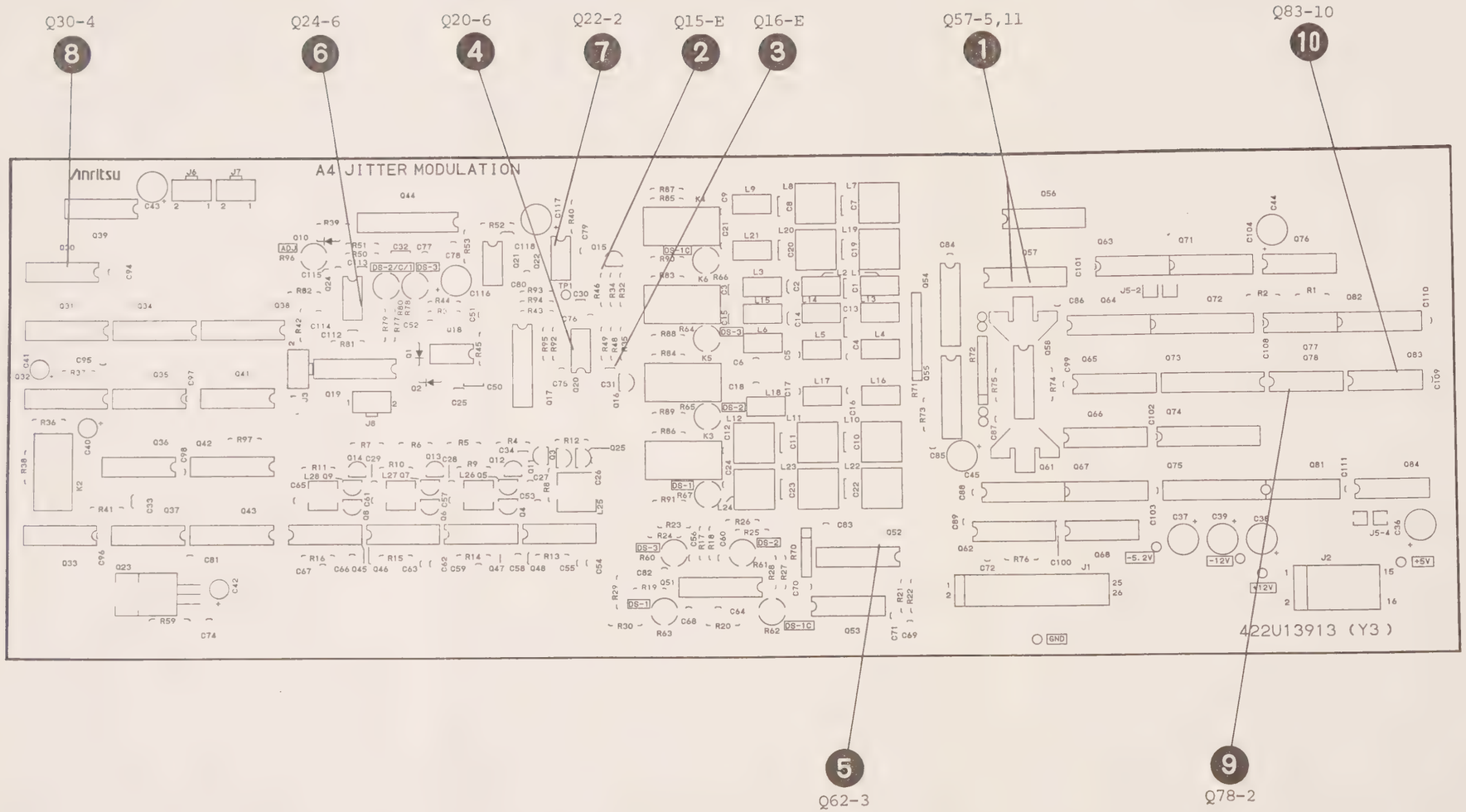

Fig. 3-57 JITTER MODULATION
PC Board 5
Parts Layout

(3-91 blank)/3-92

APPLICATION

REVISIONS

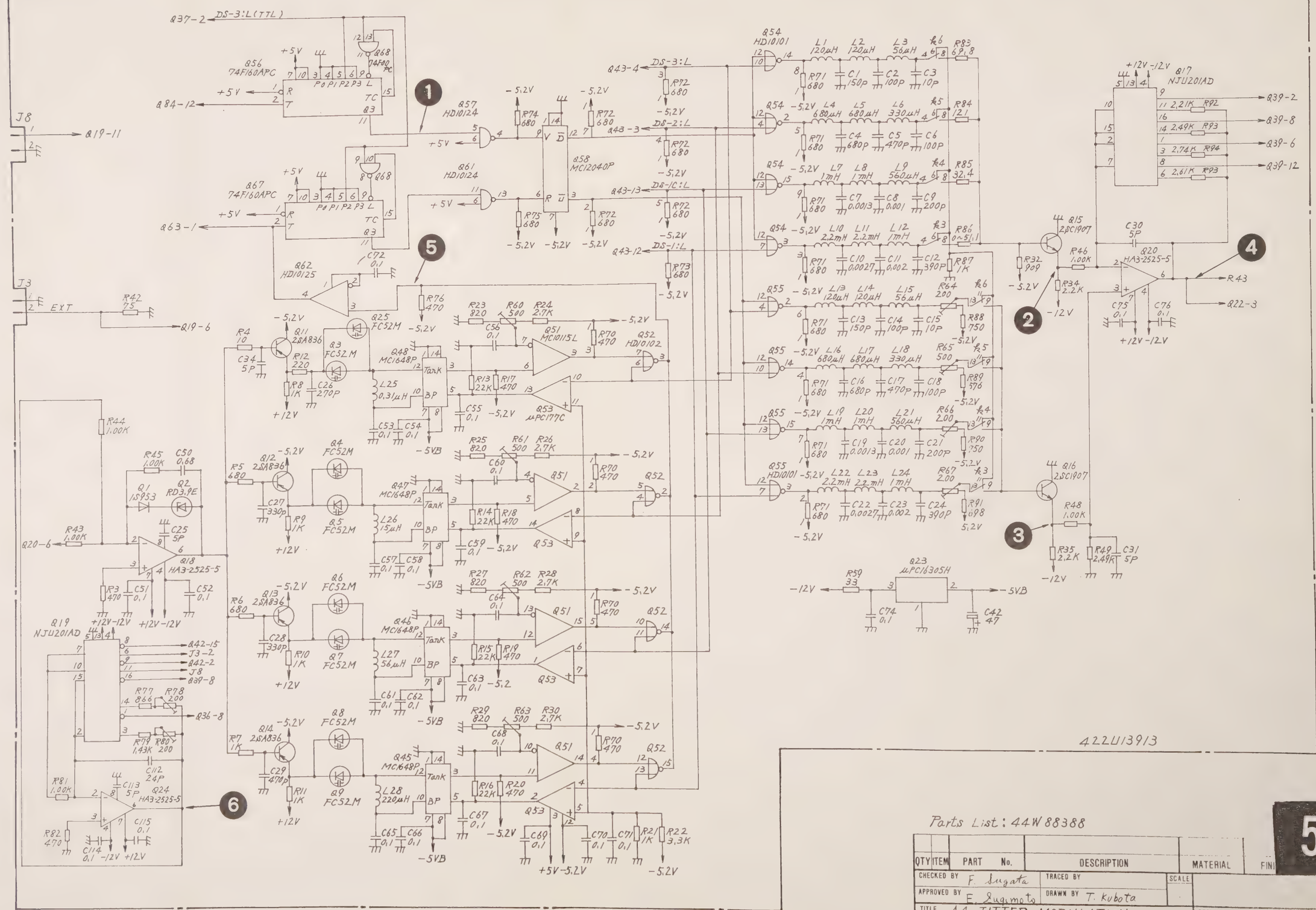

Parts List: 44W88388

QTY	ITEM	PART No.	DESCRIPTION	MATERIAL	FINI

CHECKED BY F. Sugata | TRACED BY | SCALE

APPROVED BY E. Sugimoto | DRAWN BY T. Kubota

TITLE A4 JITTER MODULATION Circuit Diagram (Transmitter) (OPT 01)

DRAWING No. 43W36038 1/3

ANRITSU CORP. 3-93/3-94

5

DEP

No 0021 1985 08

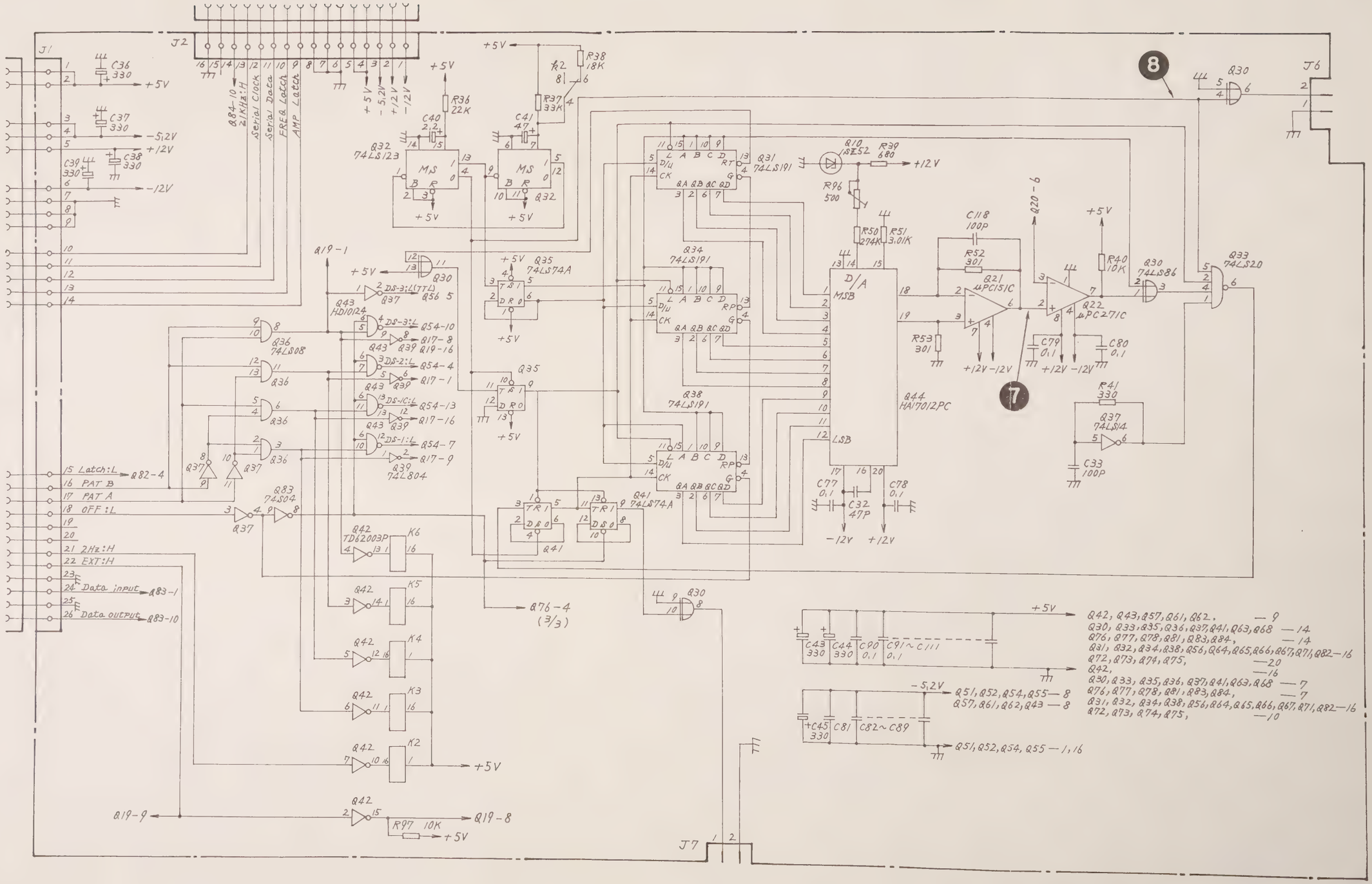

QTY	ITEM	PART No.	DESCRIPTION	MATERIAL	FINI

CHECKED BY F. Sugata
APPROVED BY E. Sugimoto
TRACED BY
DRAWN BY T. Kubota
SCALE :

TITLE A4 JITTER MODULATION
Circuit Diagram (Transmitter) (OPT 011)

DRAWING No 43W36038 2/3

5

ANRITSU CORP 3-95/3-96

No 0021-1985 08

DEP

43W36038 3/3

APPLICATION

REVISIONS

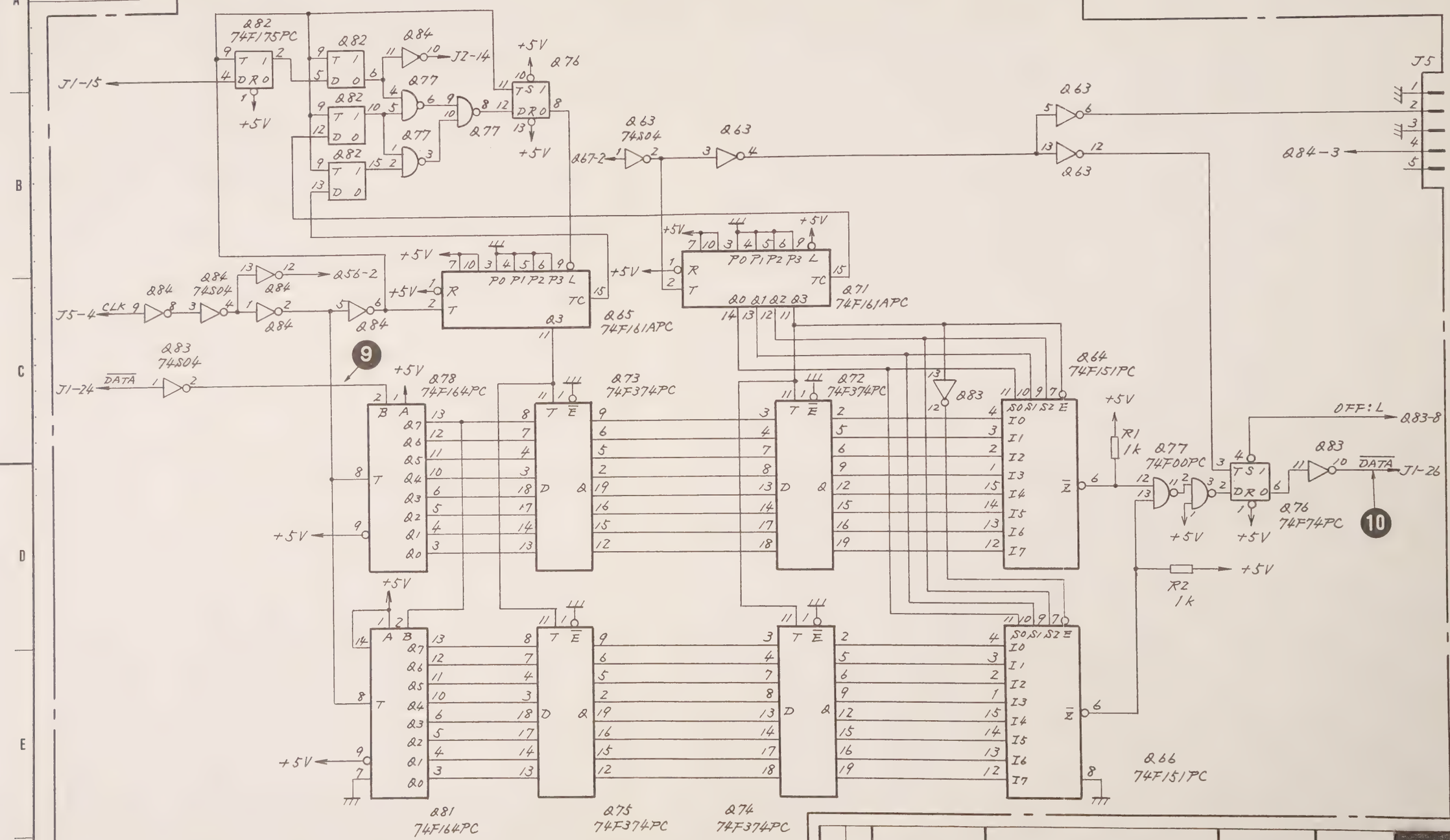

QTY	ITEM	PART No.	DESCRIPTION	MATERIAL	FINISH

CHECKED BY F. Sugata

APPROVED BY E. Sugimoto

TRACED BY

DRAWN BY T. Kubota

SCALE : M-1

TITLE A4 JITTER MODULATION Circuit Diagram. (Transmitter) (OPT 01)

DRAWING No. 43W36038 3/3

5

DEP

No. D023-1985.08

ANRITSU CORP.

3-97/3-98

3.5.6 A5 MODULATION SIGNAL GENERATOR 6

(1) Circuit description

The A5 MODULATION SIGNAL GENERATOR circuit consists of a jitter modulation oscillation circuit and level variable D/A converter and generates the jitter modulation signals (2 Hz to 300 kHz sine wave).

(2) Troubleshooting and adjustment

Panel setting

CLOCK	:	DS-3
JITTER MODULATION	:	MANUAL
FREQUENCY	:	500 Hz
AMPLITUDE	:	4 UIp-p

[Step 1]

Check the waveform at ❶ using an oscilloscope.

The waveform shown in Fig. 3-58 is normal.

If it is normal, proceed to the next step.

If it is abnormal, troubleshoot the circuits related to Z1 to ❶.

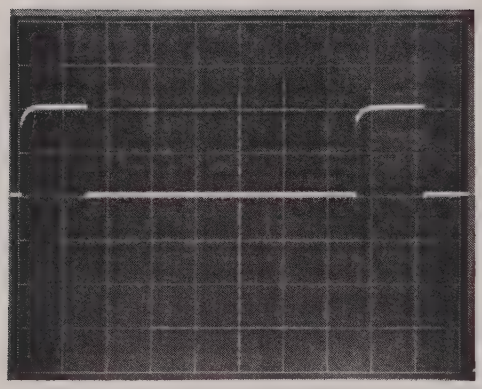

V: 2 V/div
H: 2 μs/div

Fig. 3-58 Waveform at ❶

[Step 2]

Check the waveform at ❷ using an oscilloscope.

The waveform shown in Fig. 3-59 is normal.

If it is normal, proceed to the next step.

If it is abnormal, troubleshoot the circuit related to ❷ .

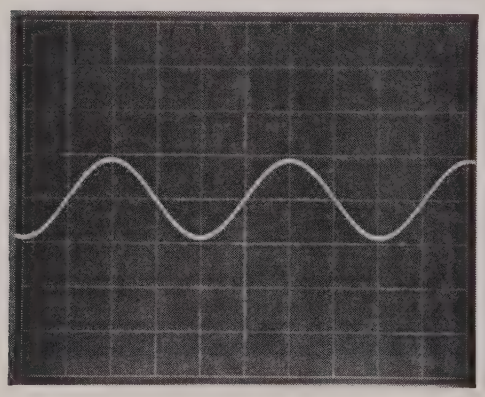

V: 0.5 V/div
H: 500 μs/div

Fig. 3-59 Waveform at ❷

[Step 3]

Check the waveform at ❸ using an oscilloscope.

The waveform shown in Fig. 3-60 is normal.

If it is normal, A4 is normal. If it is abnormal, make the following adjustment.

Adjustment

Adjust the level at R3.

If the waveform is abnormal after the above adjustment has been made, troubleshoot the circuits related to ❷ to ❸.

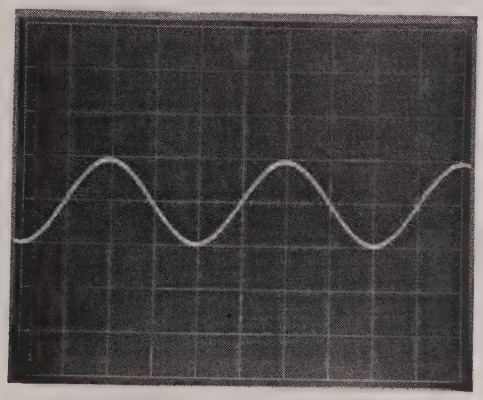

V: 0.5 V/div
H: 500 μs/div

Fig. 3-60 Waveform at ❸

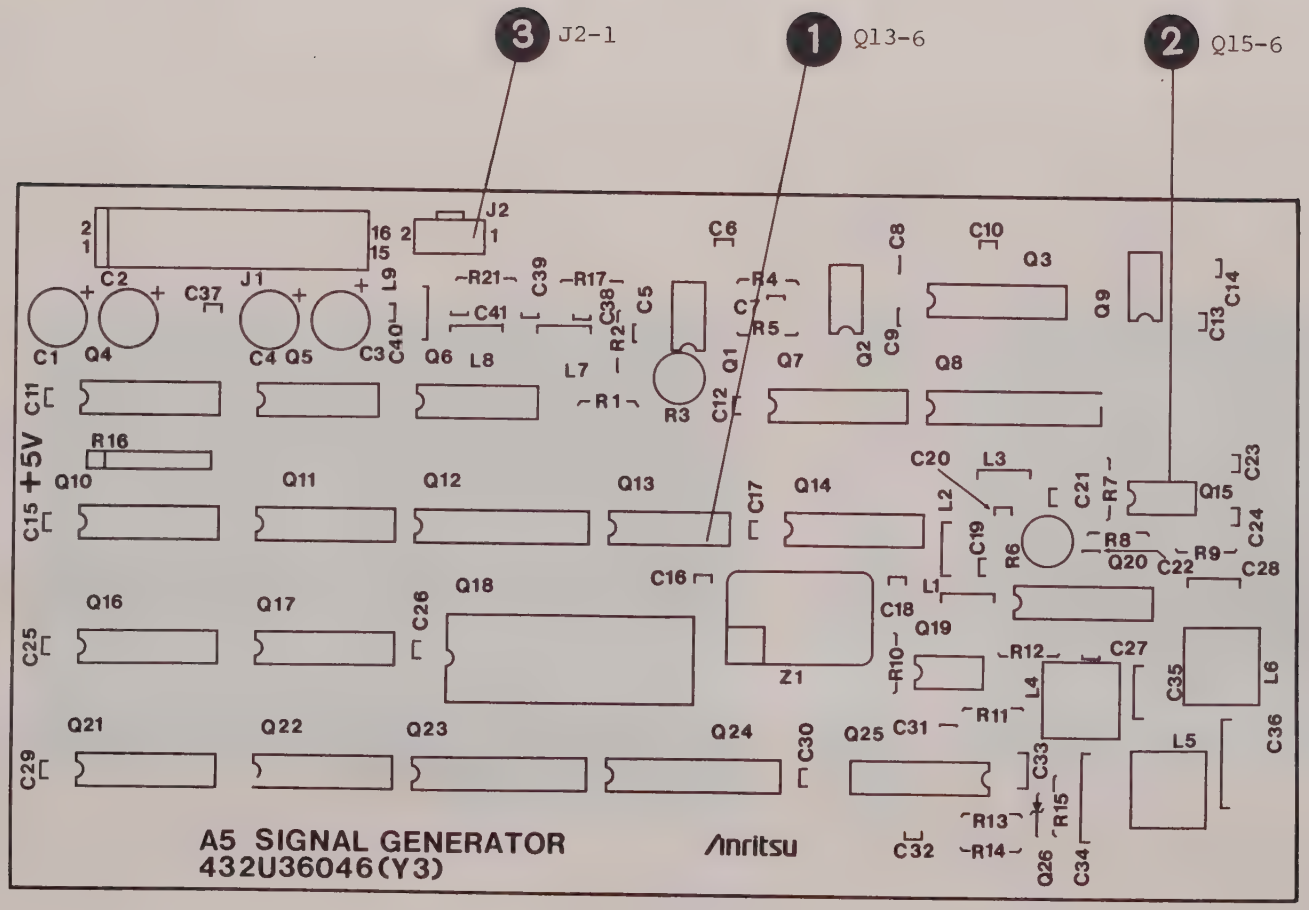

Fig. 3-61 MODULATION SIGNAL GENERATOR
PC Board 6 Parts Layout

43W36048 1/2

APPLICATION

REVISIONS

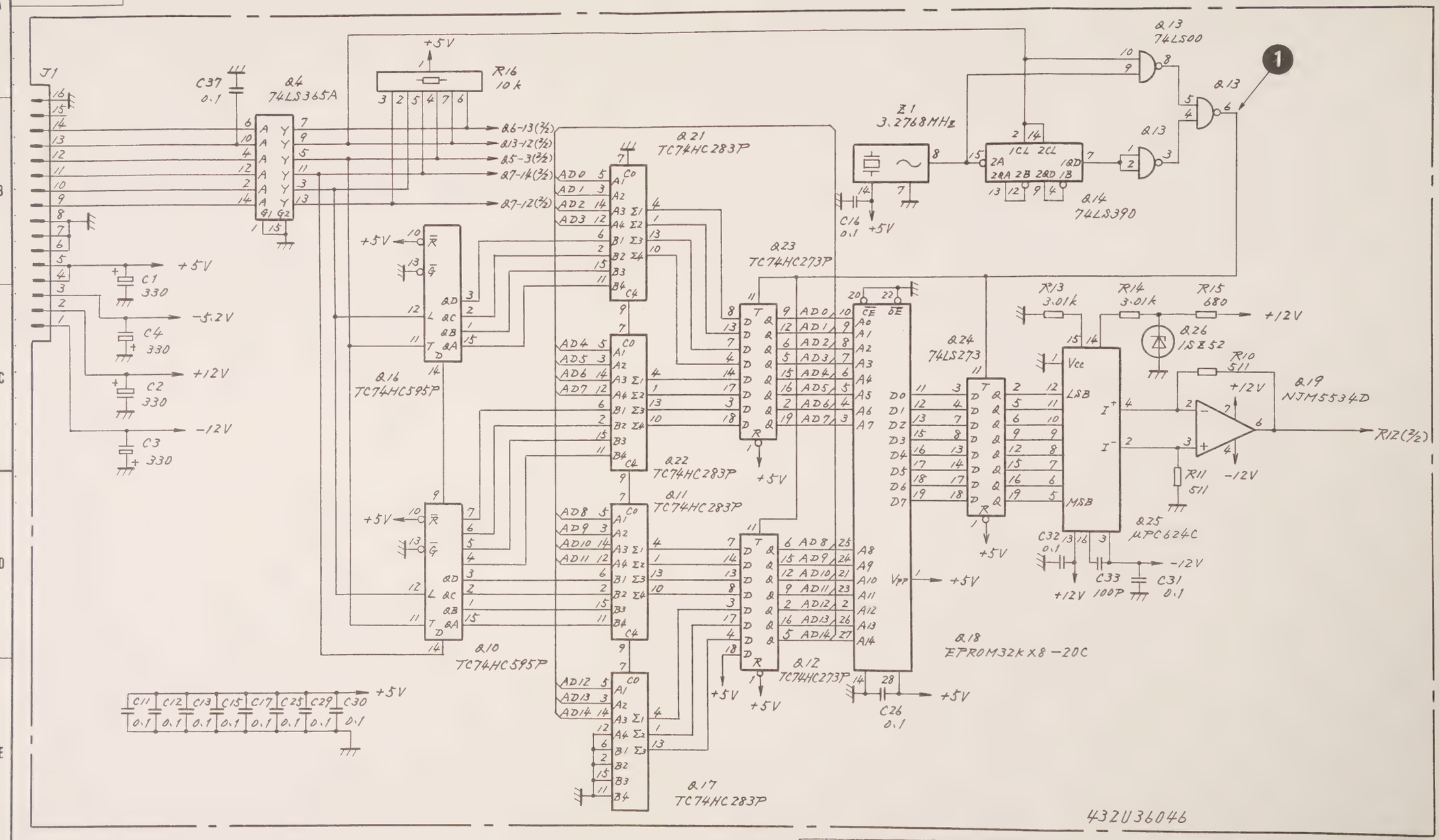

QTY	ITEM	PART No.	DESCRIPTION	MATERIAL	FINISH

CHECKED BY F. Sugata | TRACED BY | SCALE :

APPROVED BY E. Sugimoto | DRAWN BY T. Kubota

TITLE A5 MODULATION SIGNAL GENERATOR Circuit Diagram. (Transmitter) (OPT 01)

DRAWING No. 43W36048 1/2

Parts List 44W88408

DEP

6

No. 0023-1985.08

ANRITSU CORP.

3-103/3-104

43W36048 2/2

APPLICATION

REVISIONS

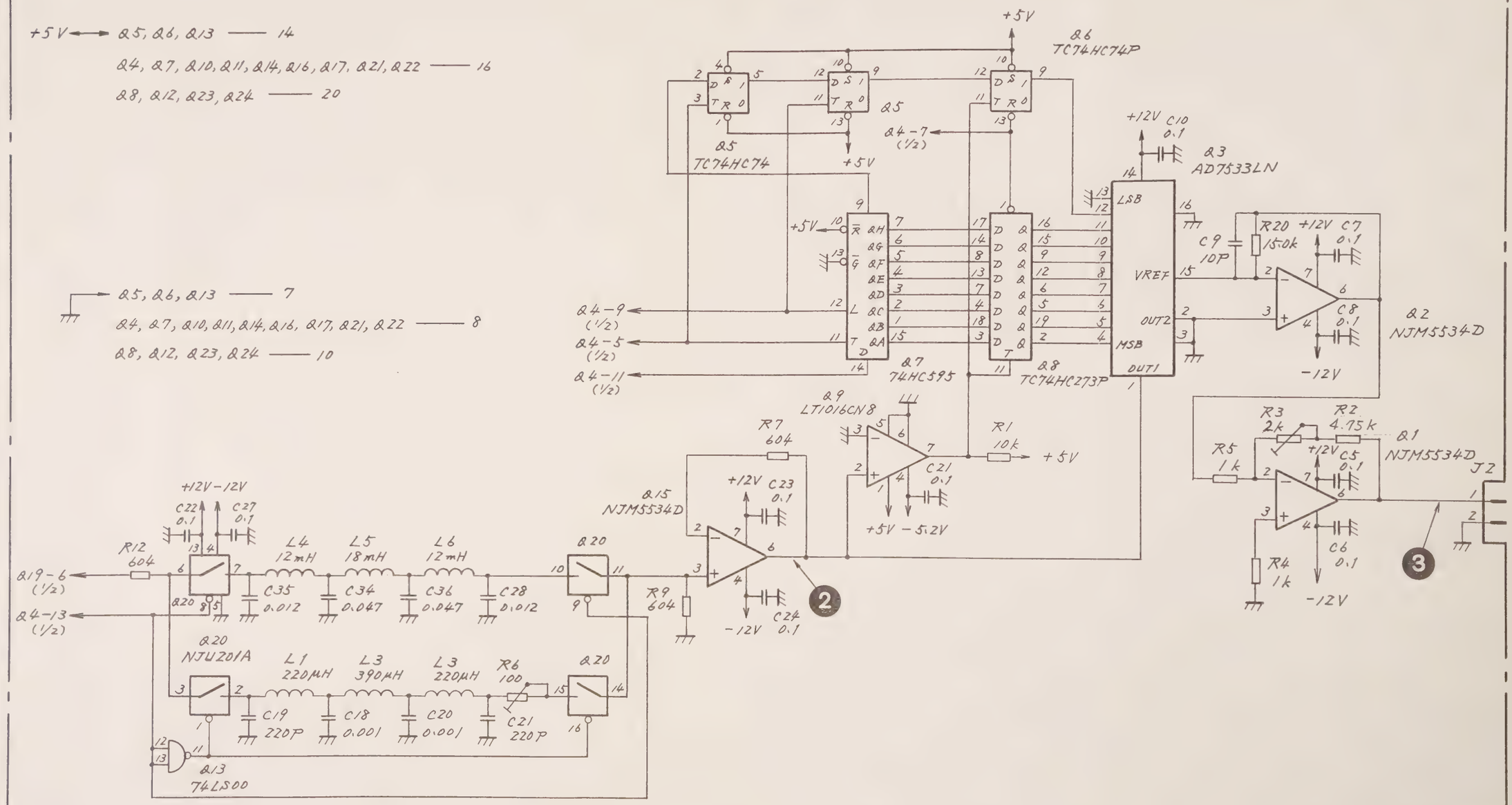

QTY	ITEM	PART No.	DESCRIPTION	MATERIAL	FINISH

CHECKED BY F. Sugata
APPROVED BY E. Sugimoto
TRACED BY
DRAWN BY T. Kubota
SCALE :
M-2

TITLE A5 MODULATION SIGNAL GENERATOR
Circuit Diagram (Transmitter) (OPT 01)

DRAWING No. 43W36048 2/2

6

DEP

No. D023-1985.08

ANRITSU CORP.

3-105/3-106

3.5.7 A6 T-SWITCH PC Board 7.

A7 GP-IB PC Board 8 and

A8 RS-232C PC Board 9

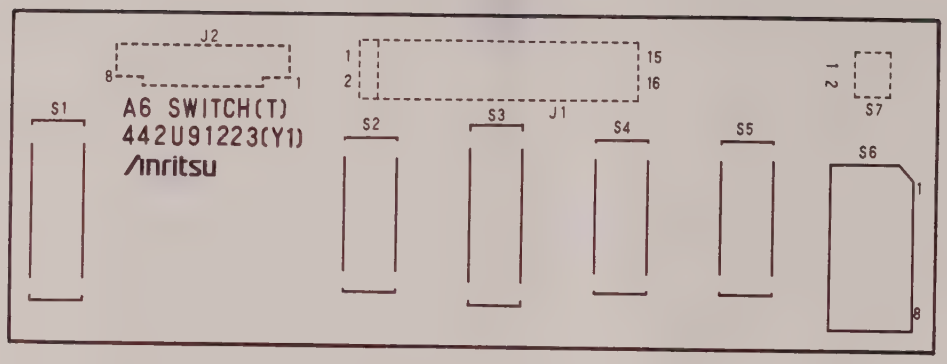

Fig. 3-62 T-SWITCH PC Board 7 Parts Layout

44W90993 1/1

APPLICATION	REVISIONS

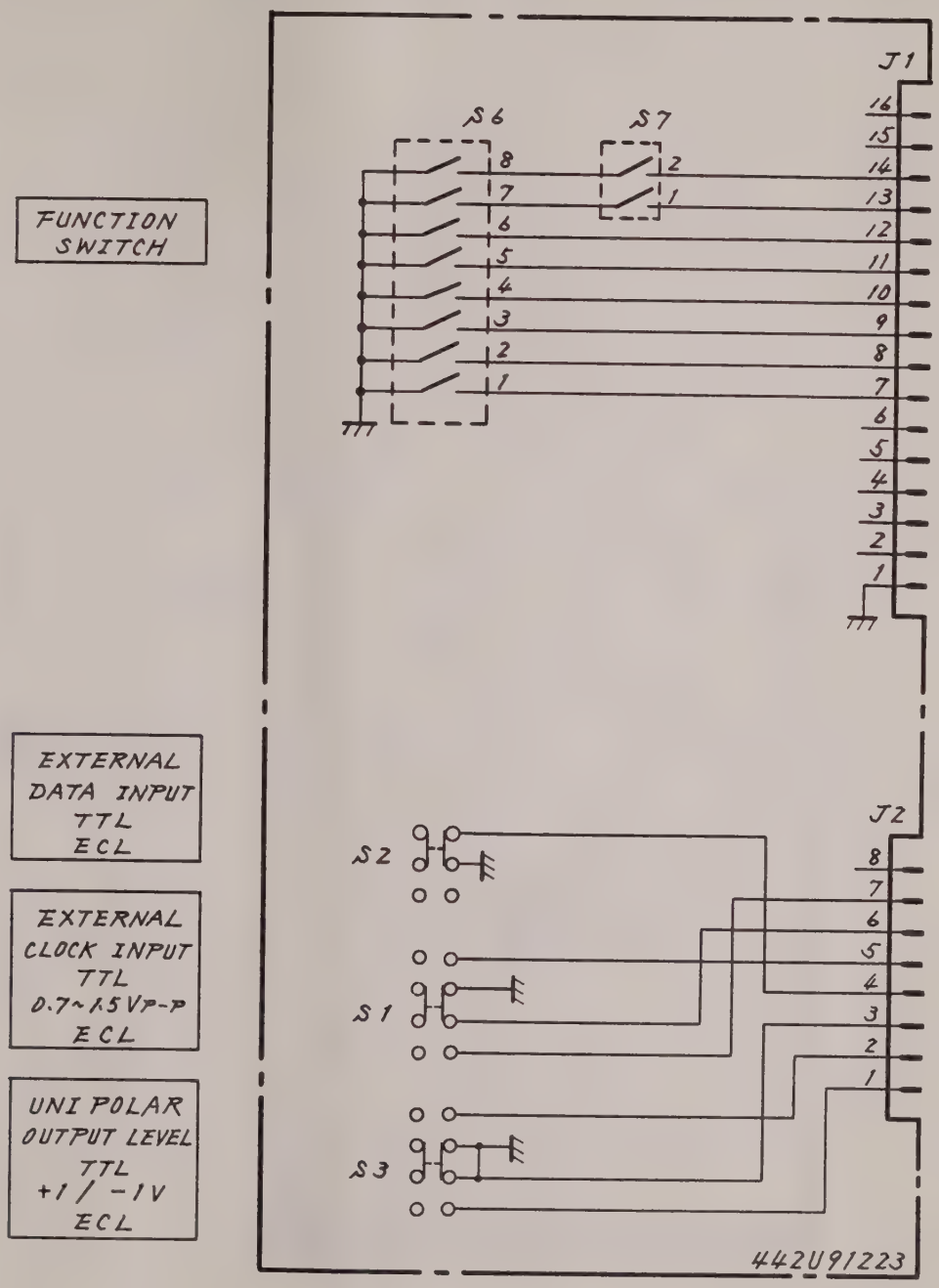

Parts List 44W90993

QTY	ITEM	PART No.	DESCRIPTION	MATERIAL	FINISH

7

CHECKED BY F. Sugata	TRACED BY	SCALE	
APPROVED BY E. Sugimoto	DRAWN BY T. Kubota	:	

DEP

TITLE A6 T-SWITCH Circuit Diagram (Transmitter)

DRAWING No. 44W90992 1/1

No. DX25-1985.08

ANRITSU CORP.

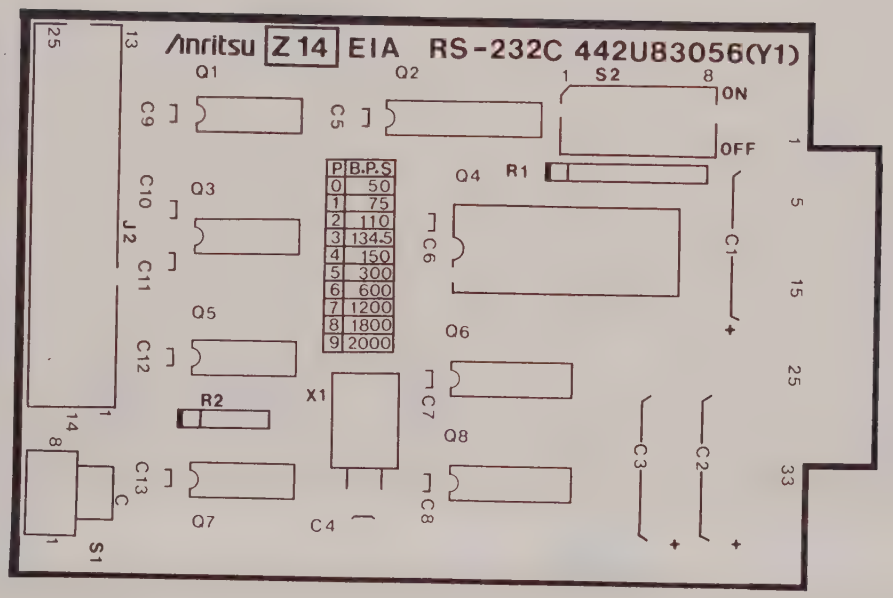

Fig. 3-63 GP-IB PC Board 8 Parts Layout

43W33432 1/1

APPLICATION

REVISIONS

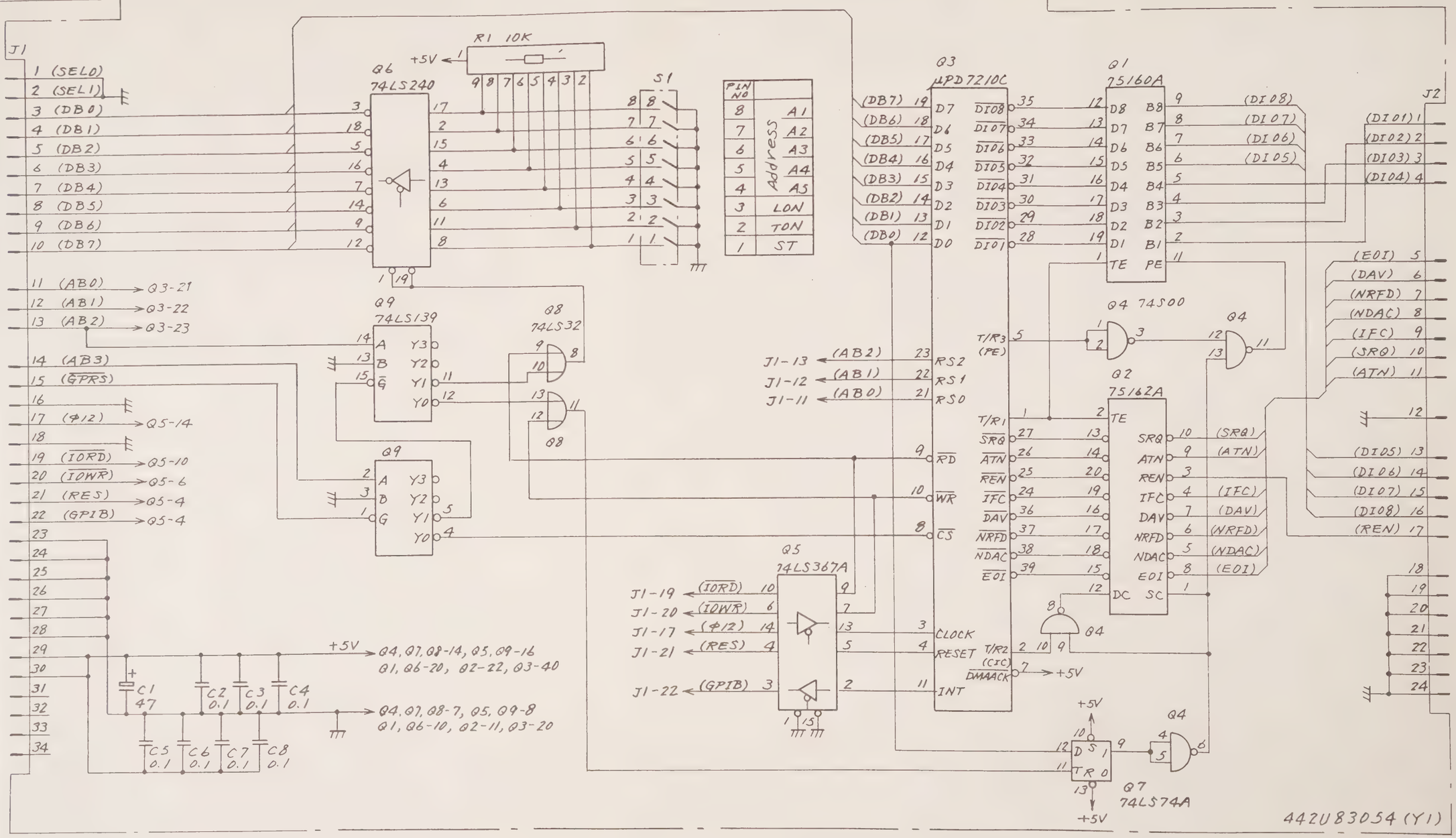

Parts List	44W83046

QTY	ITEM	PART No.	DESCRIPTION	MATERIAL	FINISH

8

CHECKED BY	TRACED BY	SCALE
APPROVED BY	DRAWN BY	:

TITLE A7(OPTION 41) GP-IB Circuit Diagram

DRAWING No. 43W33432 1/1

DEP

No. D023-1985 08

ANRITSU CORP.

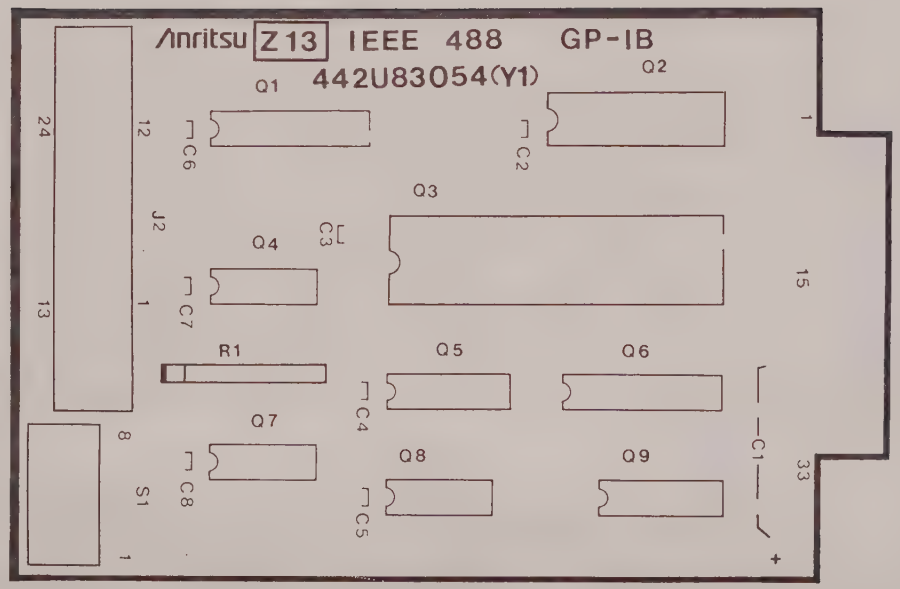

Fig. 3-64 RS-232C PC Board 9 Parts Layout

43W33433 1/1

APPLICATION

REVISIONS

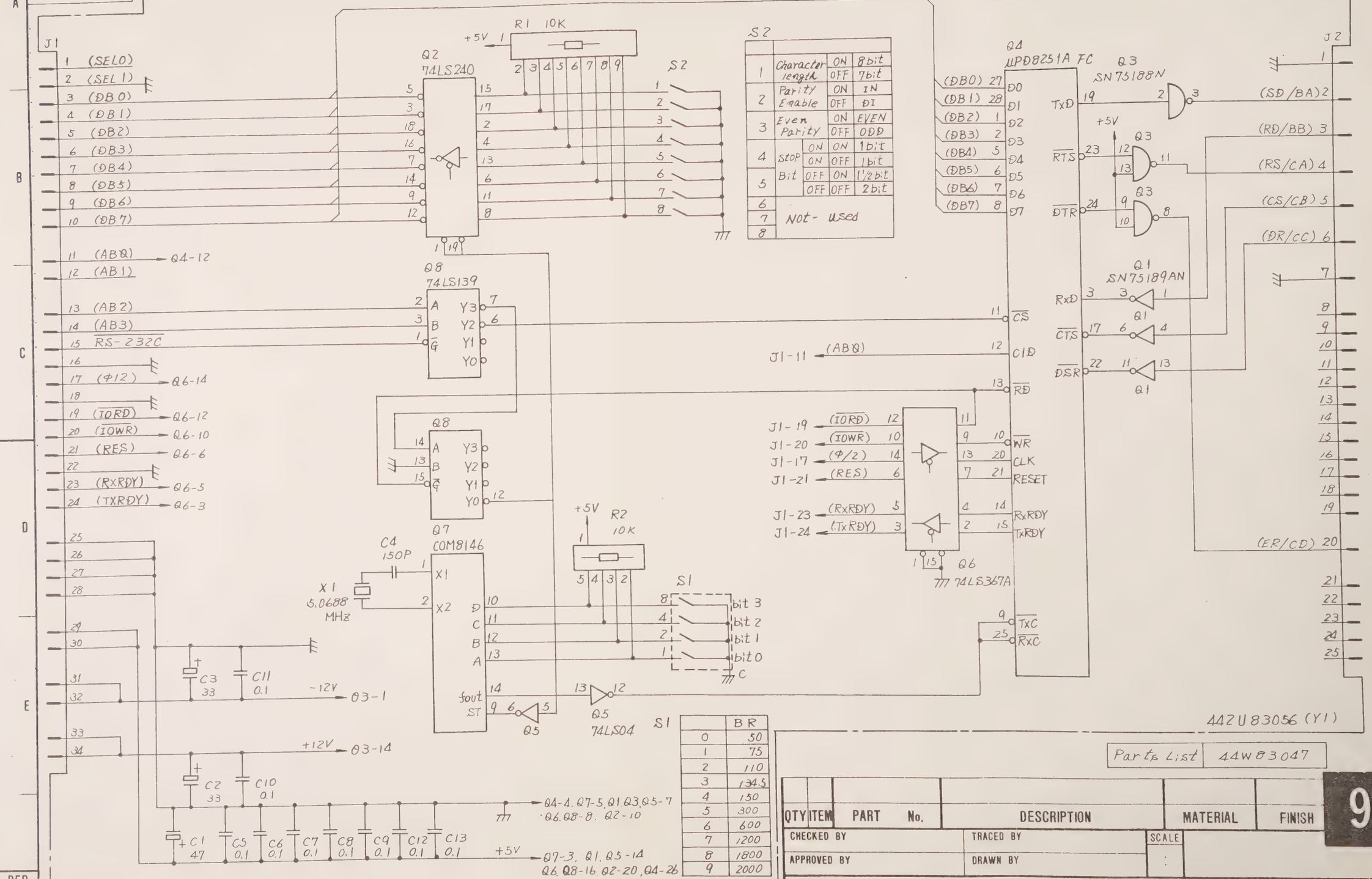

1	Character length	ON	8bit
		OFF	7bit
2	Parity Enable	ON	IN
		OFF	DI
3	Even Parity	ON	EVEN
		OFF	ODD
4	Stop Bit	ON ON	1bit
		ON OFF	1bit
5		OFF ON	1½bit
		OFF OFF	2bit
6	Not-used		
7			
8			

S1	BR
0	50
1	75
2	110
3	134.5
4	150
5	300
6	600
7	1200
8	1800
9	2000

Parts List 44W83047

QTY	ITEM	PART No.	DESCRIPTION	MATERIAL	FINISH

CHECKED BY | TRACED BY | SCALE

APPROVED BY | DRAWN BY

TITLE A8 (OPTION 43, 44) RS232C

DRAWING No. 43W33433 1/1

9

DEP

No. D023-1985.08

ANRITSU CORP.

3.6 Receiver Troubleshooting and Adjustment

3.6.1 Overall troubleshooting 10

Figure 3-65 is the receiver block diagram. The ME3401A receiver consists of A1 ERROR DET, A2 R-CONTROL, A3 R-DISPLAY, A4 R-SWITCH, A4 JITTER MEASUREMENT, A6 GP-IB, A7 RS-232C, and A8 PRINTER. For details of each circuit, refer to paragraphs 3.6.3 to 3.6.6.

If a problem is indicated by the performance check (operation manual, SECTION 9), locate the fault by using the following procedures.

[Step 1]

When the power switch is turned on, does the POWER-ON lamp come on?

If it does not come on,

AC operation

- AC power cord is not connected to the AC power supply or the AC power cord is disconnected.
- AC fuse on the rear panel is blown.
- AC power circuit (A2 and S1) is defective.
- LED (Q13-A3) is defective.

DC operation

- Abnormal DC supply voltage (specification: -22 to -53 V)
- Connection abnormal between DC power supply and DC input
- POWER circuit (A2 and S1) is defective.
- LED (Q13-A3) is defective.

[Step 2]

When each switch on the front panel is operated, does each display (including LEDs) come on normally?

If it does not come on,

A2 R-CONTROL is defective (paragraph 3.6.2).

A3 R-DISPLAY is defective (paragraph 3.6.4).

[Step 3]

Unless the DS-3 input, DS-1/DS-1C/DS-2 input, unipolar input, pattern, frame, measurement, and alarm detection are normal, A1 ERROR DET is abnormal (paragraph 3.6.3).

[Step 4]

Unless the printer is normal, A8 PRINTER is abnormal (paragraph 3.6.6).

[Step 5]

Unless JITTER MEASUREMENT is normal, A5 JITTER MEASUREMENT (paragraph 3.6.5) or A1 ERROR DET (paragraph 3.6.3) is abnormal.

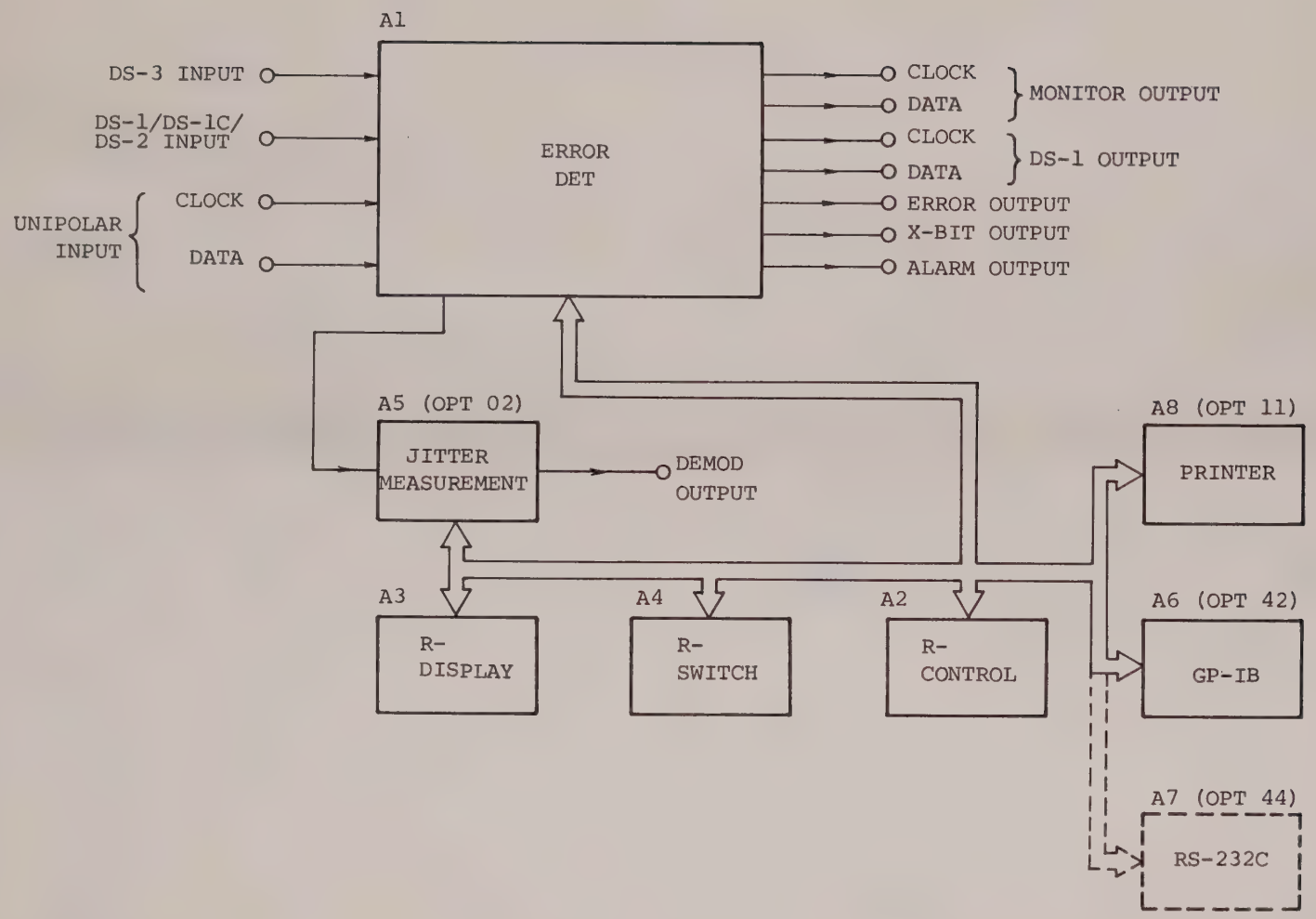

Fig. 3-65 Simplified Block Diagram of ME3401A Receiver

43W36039 1/1

APPLICATION

REVISIONS

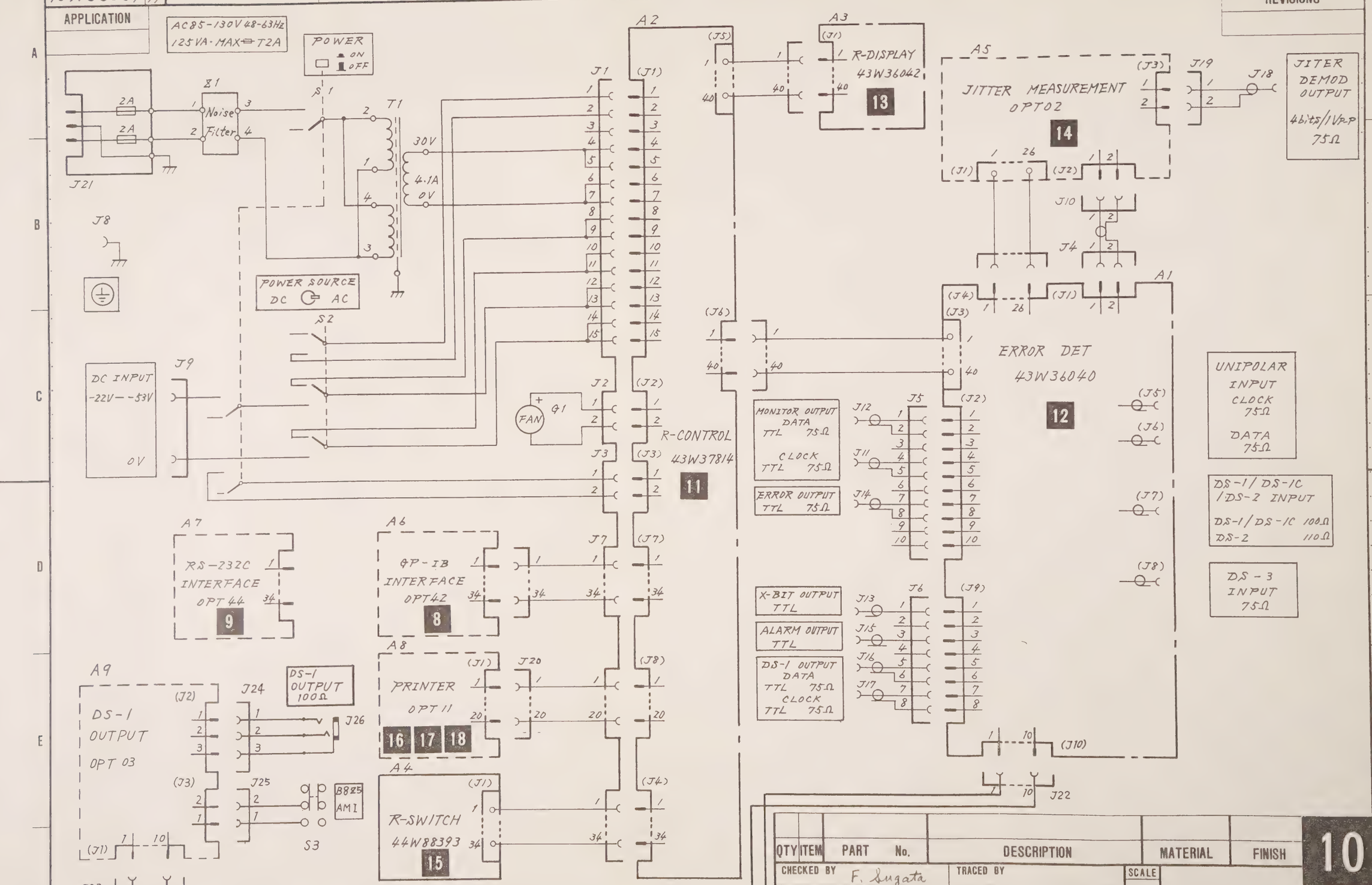

QTY	ITEM	PART No.	DESCRIPTION	MATERIAL	FINISH

10

CHECKED BY F. Sugata
APPROVED BY E. Sugimoto
TRACED BY
DRAWN BY T. Kubota
SCALE : M-1

TITLE DIGITAL TRANSMISSION ANALYZER
ME3401A Receiver Circuit Diagram.

DRAWING No. 43W36039 1/1

Parts List 44W88389

DEP

No. D023-1985.08

ANRITSU CORP.

3-119/3-120

3.6.2 A2 R-CONTROL PC board 11

(1) Circuit description

The A2 R-CONTROL circuit consists of the front-panel switches, display, each circuit, GP-IB, RS-232C, printer control circuit, and +5, +12, +24, -5.2, and -12 V power circuits.

(2) Troubleshooting

[Step 1]

Check the waveform between ❶ and ground using an oscilloscope. The waveform shown in Fig. 3-66 is normal. Check the frequency at ❶ using a frequency counter. A frequency of 4.000 MHz is normal. If the waveform and frequency are normal, proceed to the next step. If they are abnormal, troubleshoot the circuits related to Z1, Q54, and Q56.

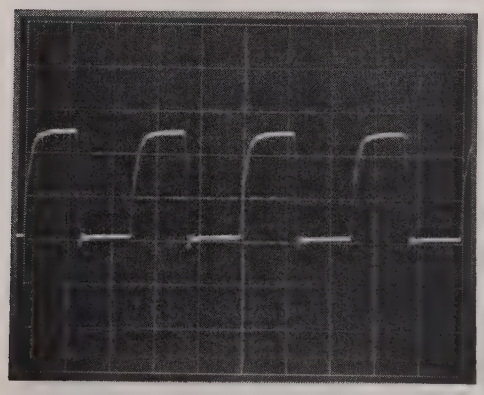

V: 2 V/div
H: 100 ns/div

Fig. 3-66 Waveform at ❶

[Step 2]

Check the level between ❷ and ❸, and ground using an oscilloscope. The waveforms shown in Fig. 3-67 are normal.

If the waveforms are normal, proceed to the next step.

If they are abnormal, troubleshoot the circuits related to ❷ and ❸.

[Step 3]

Check the waveform between ❹ and ground using an oscilloscope.

The waveforms shown in Fig. 3-67 are normal.

If the waveforms are normal, proceed to the next step.

If they are abnormal, troubleshoot the circuit related to ❹.

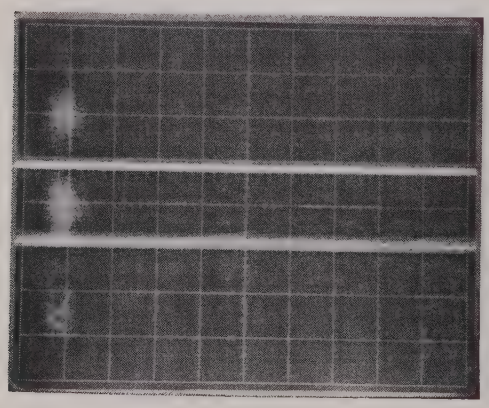

V: 2 V/div
H: 200 ns/div

Fig. 3-67 Waveforms at ❹

[Step 4]

Check the voltage between ❺ and ground using a DC voltmeter. A voltage within +2.5 to +4 V is normal.

If it is normal, proceed to the next step.

If it is abnormal, troubleshoot the circuits related to Z2 and R60.

[Step 5]

Check the waveform between ❻ and FG using an oscilloscope.

The waveform shown in Fig. 3-68 is normal. Also, check that the voltage between ❻ and FG is within +30 to +50 V.

If the waveform and voltage are normal, proceed to the next step.

If they are abnormal, troubleshoot the circuit related to ❻.

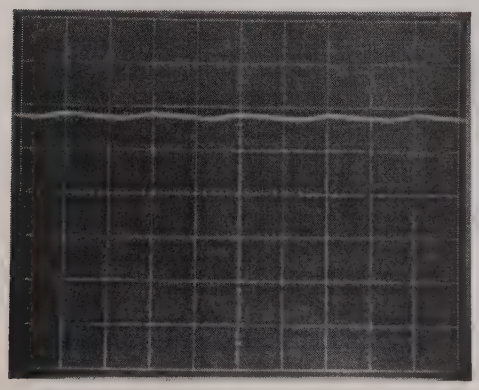

V: 10 V/div
H: 5 ms/div

Fig. 3-68 Waveform at ❼

[Step 6]

Check the voltage between ❼ and FG using a DC voltmeter. A voltage within +13 to +18 V is normal.

If it is normal, proceed to the next step.

If it is abnormal, troubleshoot the circuit related to ❼.

[Step 7]

Check the waveform between ❽ and FG using an oscilloscope.

The waveform shown in Fig. 3-69 is normal.

If it is normal, proceed to the next step.

If it is abnormal, troubleshoot the circuit related to ❽.

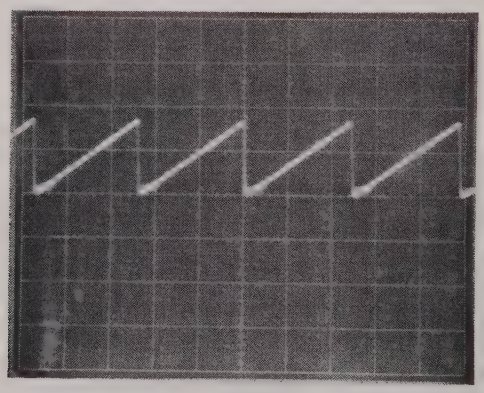

V: 2 V/div
H: 5 μs/div

Fig. 3-69 Waveform at ❽

[Step 8]

Check the waveforms between ❾ and ❿, and FG using an oscilloscope. The waveforms shown in Fig. 3-70 are normal. If they are normal, proceed to the next step.

If they are abnormal, troubleshoot the circuits related to ❾ and ❿.

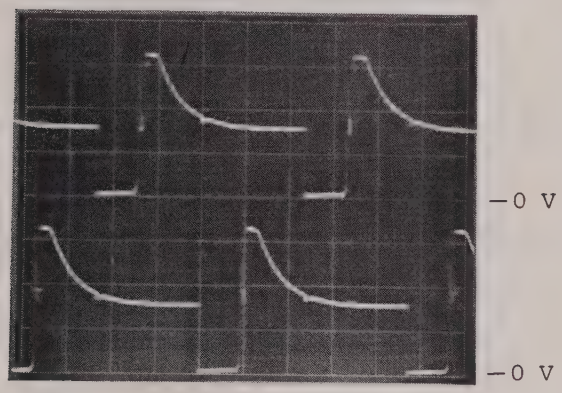

V: 10 V/div
H: 5 μs/div

Fig. 3-70 Waveforms at ❾ and ❿

[Step 9]

Check the waveform between ⓫ and FG using an oscilloscope.

The waveform shown in Fig. 3-71 is normal.

If it is normal, proceed to the next step.

If they are abnormal, troubleshoot the circuits related to ⓫.

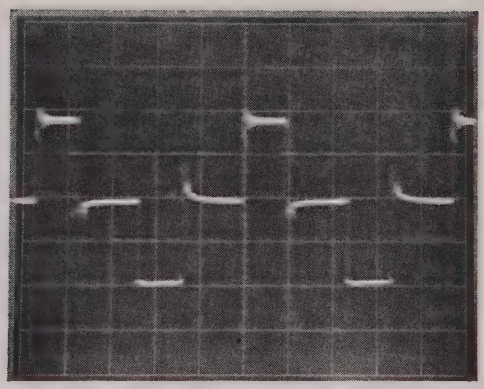

—0 V

V: 20 V/div
H: 5 μs/div

Fig. 3-71 Waveform at ⓫

[Step 10]

Check the waveform between ⓬ and FG using an oscilloscope probe.

The waveform shown in Fig. 3-72 is normal.

If it is normal, proceed to the next step.

If it is abnormal, troubleshoot the circuit related to ⓬.

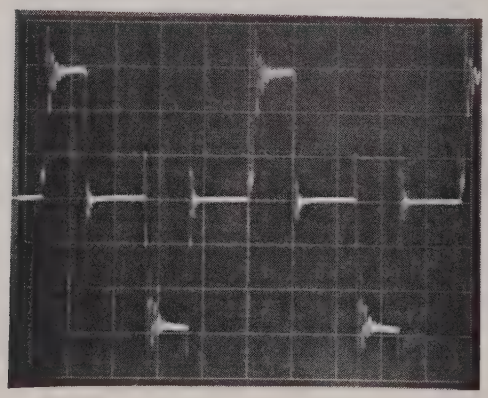

—0 V

V: 5 V/div
H: 5 μs/div

Fig. 3-72 Waveform at ⓬

[Step 11]

Check the voltage between ⓰ and ground using a DC voltmeter.

A voltage within -5.0 to -5.5 V is normal.

If it is normal, proceed to the next step.
If it is abnormal, adjust R40.

If it is still abnormal, troubleshoot circuits ⓬ to ⓰, and ⓲ to ⓯, and the circuit related to R40.

[Step 12]

Check the voltage between ⓭, ⓮, ⓯, ⓱ and grounds using a DC voltmeter.

Test Point	Voltage range
⓮	+4.8 V to +5.5 V
⓯	-11.4 V to -12.6 V
⓰	+11.4 V to +12.6 V
⓲	+22.8 V to +25.2 V

Voltages within the above voltages are normal.
If they are abnormal, troubleshoot the circuits related to ⓭, ⓮, ⓯, and ⓱.

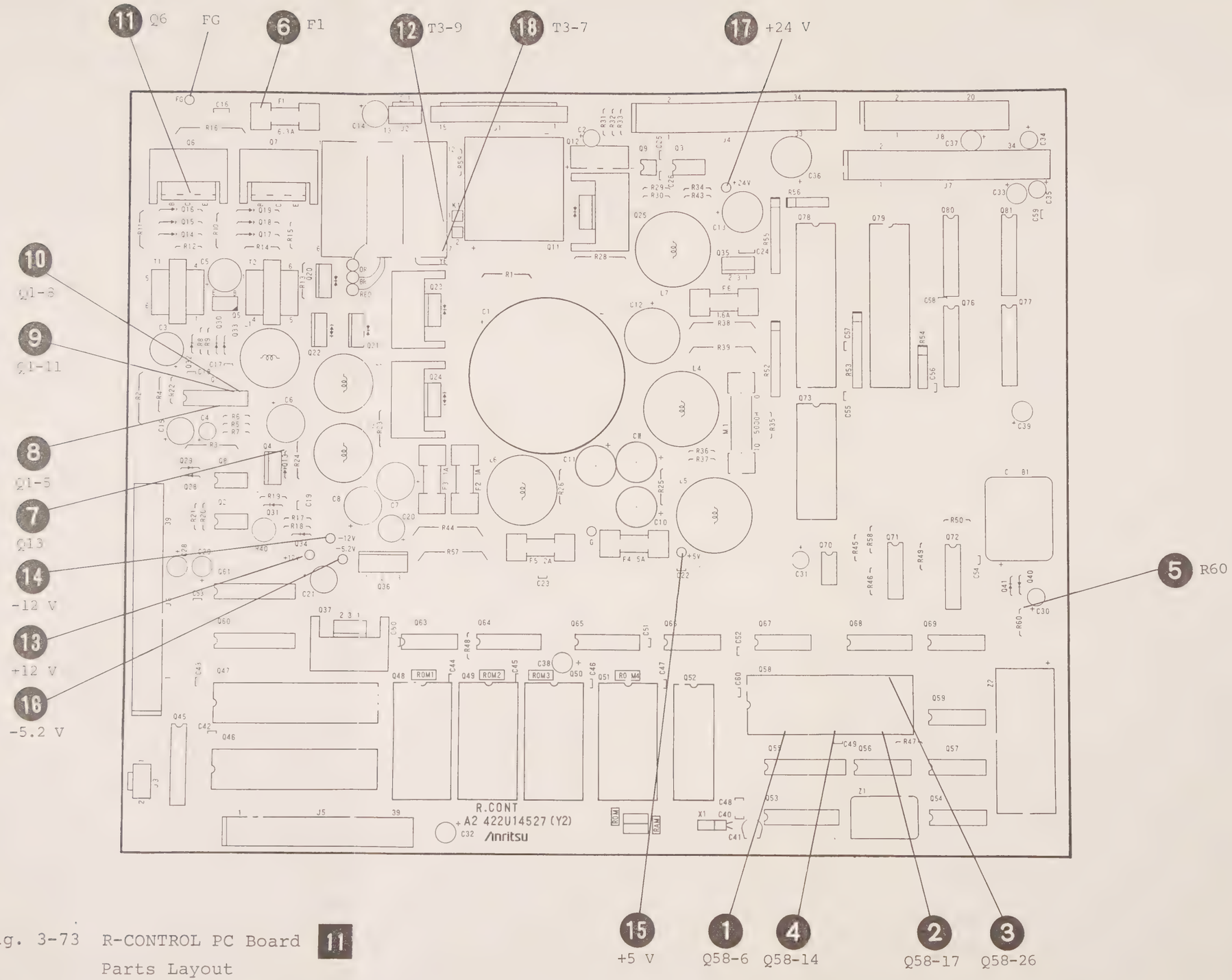

Fig. 3-73 R-CONTROL PC Board 11
Parts Layout

43W37814 1/5

APPLICATION

REVISIONS

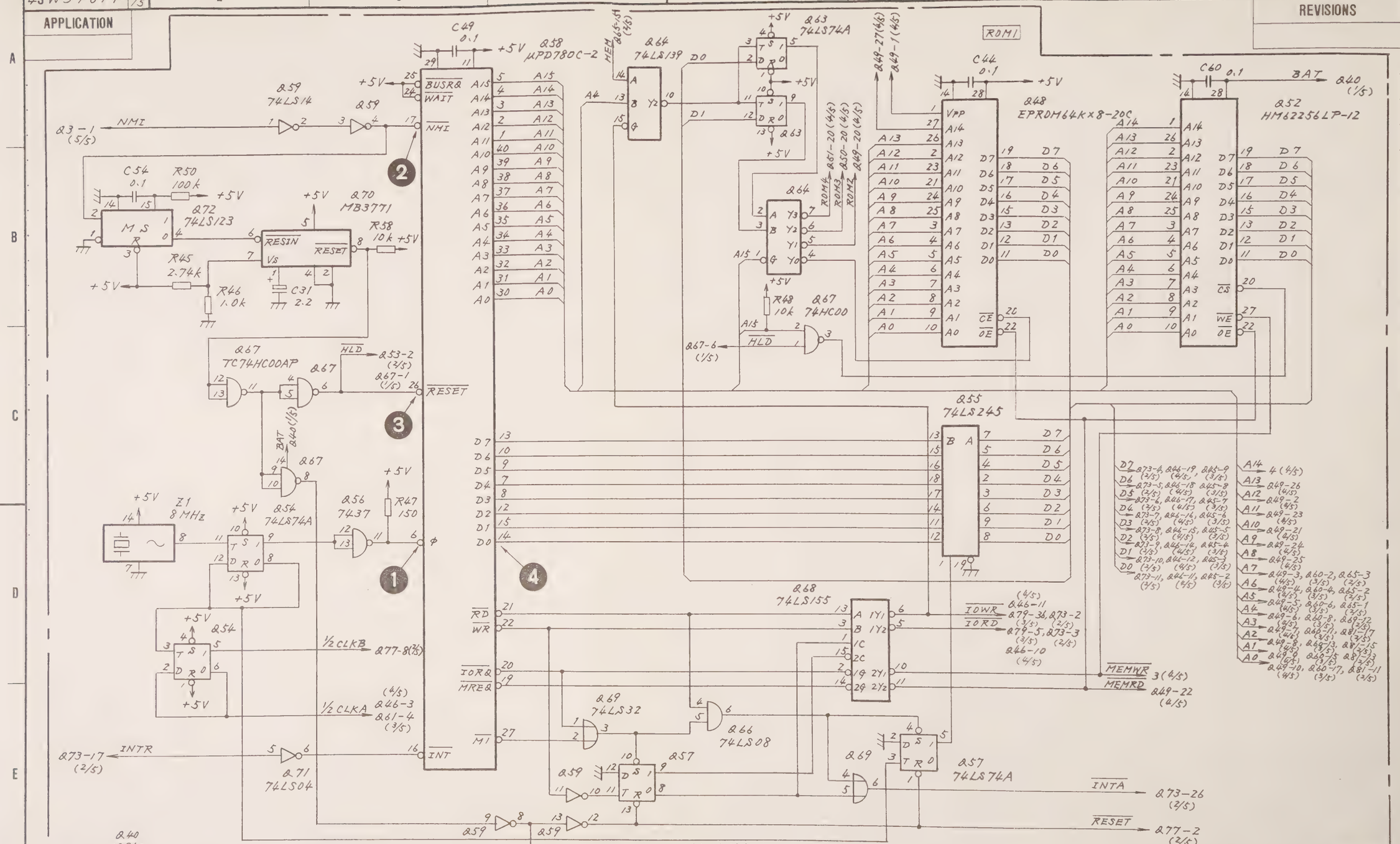

QTY	ITEM	PART No.	DESCRIPTION	MATERIAL	FINISH

CHECKED BY F. Sugata
APPROVED BY E. Sugimoto
TRACED BY
DRAWN BY T. Kubota
SCALE :

TITLE A2 R-CONTROL Circuit Diagram. (Receiver)

DRAWING No. 43W37814 1/5

11

422U14527

Parts List 44W91570

DEP

No. D023-1985.08

ANRITSU CORP.

3-129/3-130

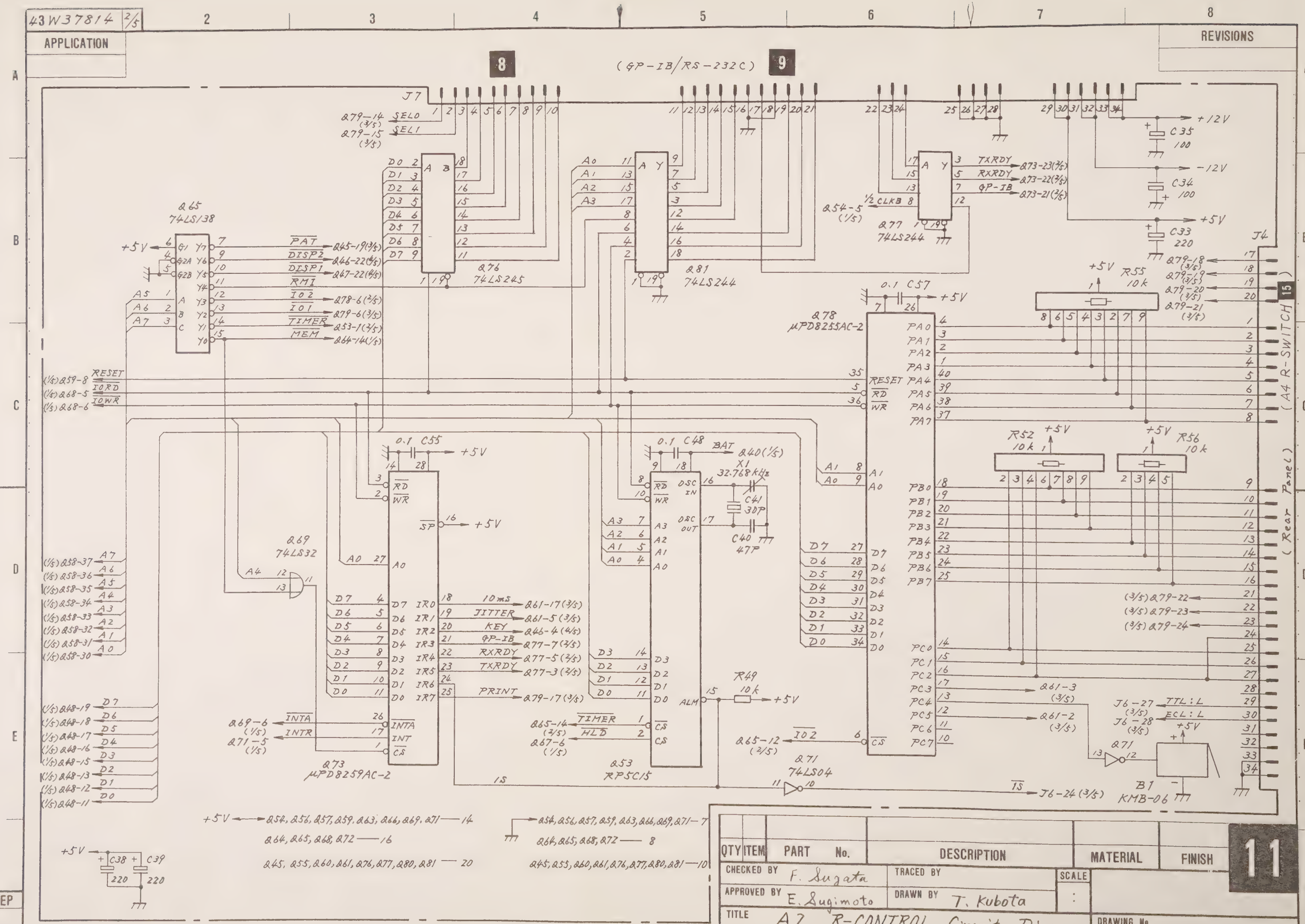

QTY	ITEM	PART No.	DESCRIPTION	MATERIAL	FINISH

CHECKED BY F. Sugata
APPROVED BY E. Sugimoto
TRACED BY
DRAWN BY T. Kubota
SCALE :

TITLE A2 R-CONTROL Circuit Diagram (Receiver)

DRAWING No. 43W37814 2/5

11

43W37814 3/5

APPLICATION

REVISIONS

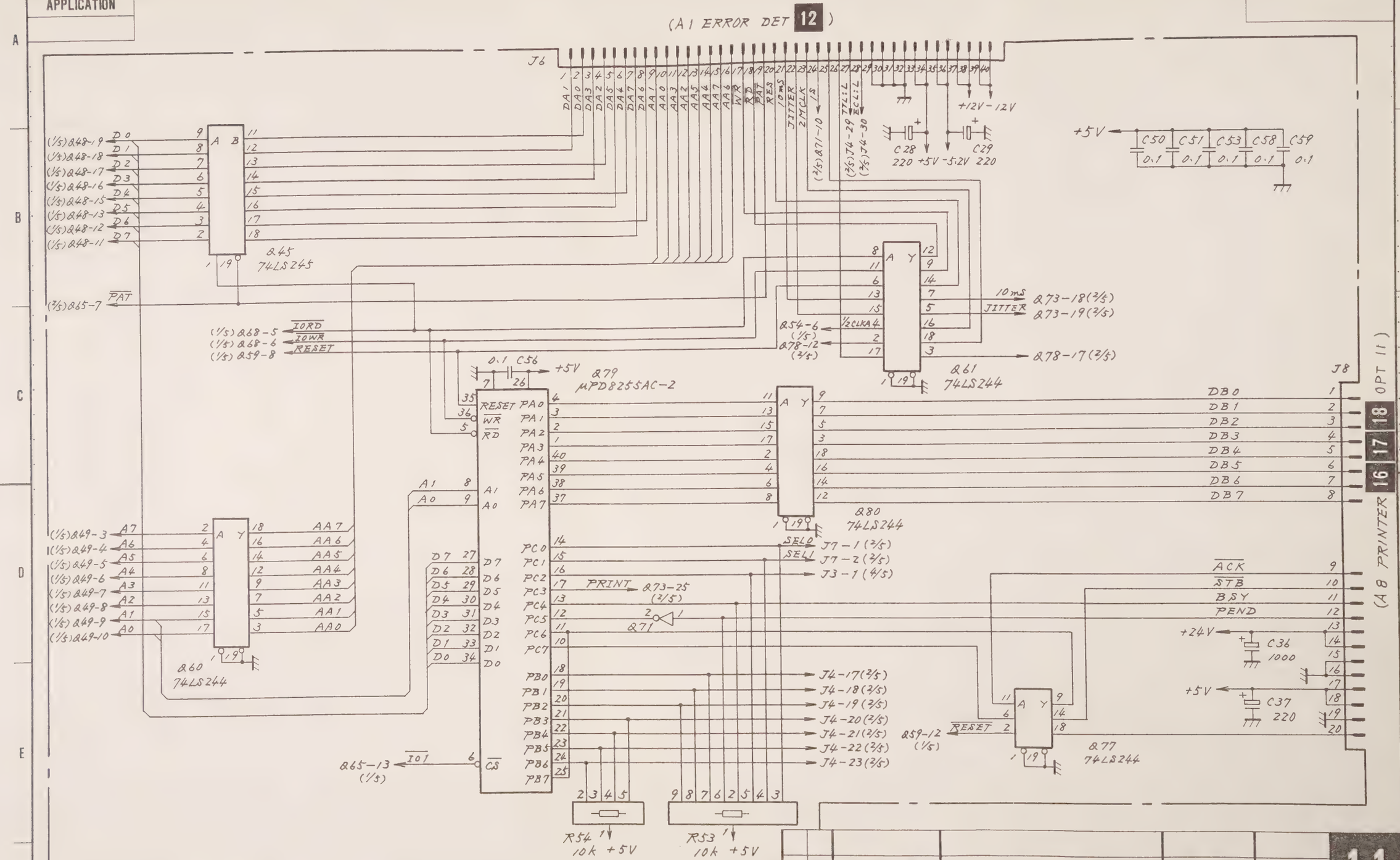

QTY	ITEM	PART No.	DESCRIPTION	MATERIAL	FINISH

CHECKED BY F. Sugata
APPROVED BY E. Sugimoto
TRACED BY
DRAWN BY T. Kubota
SCALE :

TITLE A2 R-CONTROL Circuit Diagram (Receiver)

DRAWING No. 43W37814 3/5

11

DEP

No. D023·1985.08

ANRITSU CORP.

43W37814 4/5

APPLICATION

REVISIONS

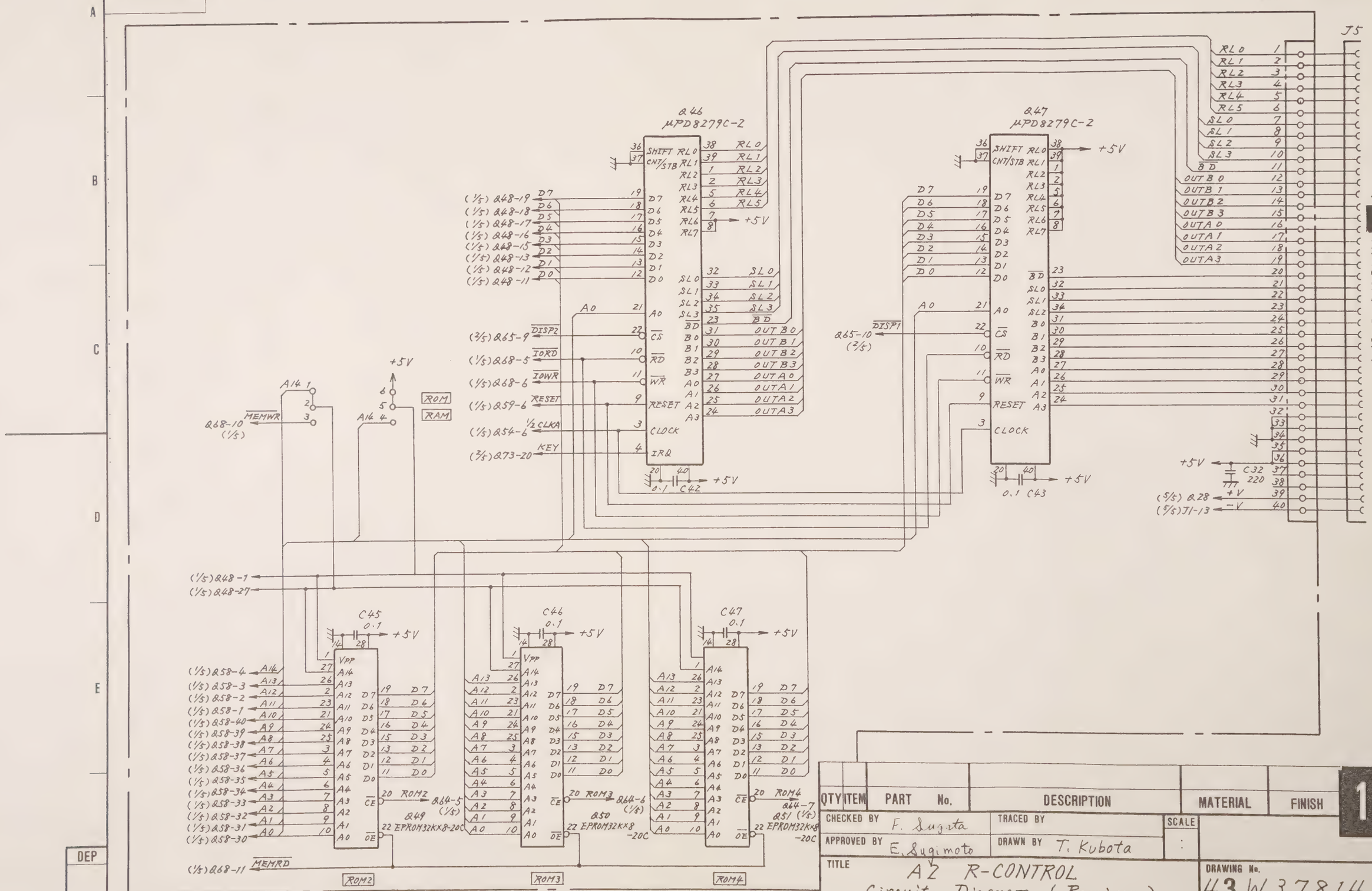

QTY	ITEM	PART No.	DESCRIPTION	MATERIAL	FINISH

CHECKED BY F. Sugita
APPROVED BY E. Sugimoto
TRACED BY
DRAWN BY T. Kubota
SCALE :

TITLE A2 R-CONTROL
Circuit Diagram (Receiver)

DRAWING No. 43W37814 4/5

11

DEP

No. 0023·1985.08

ANRITSU CORP.

43W37814 5/5

APPLICATION

REVISIONS

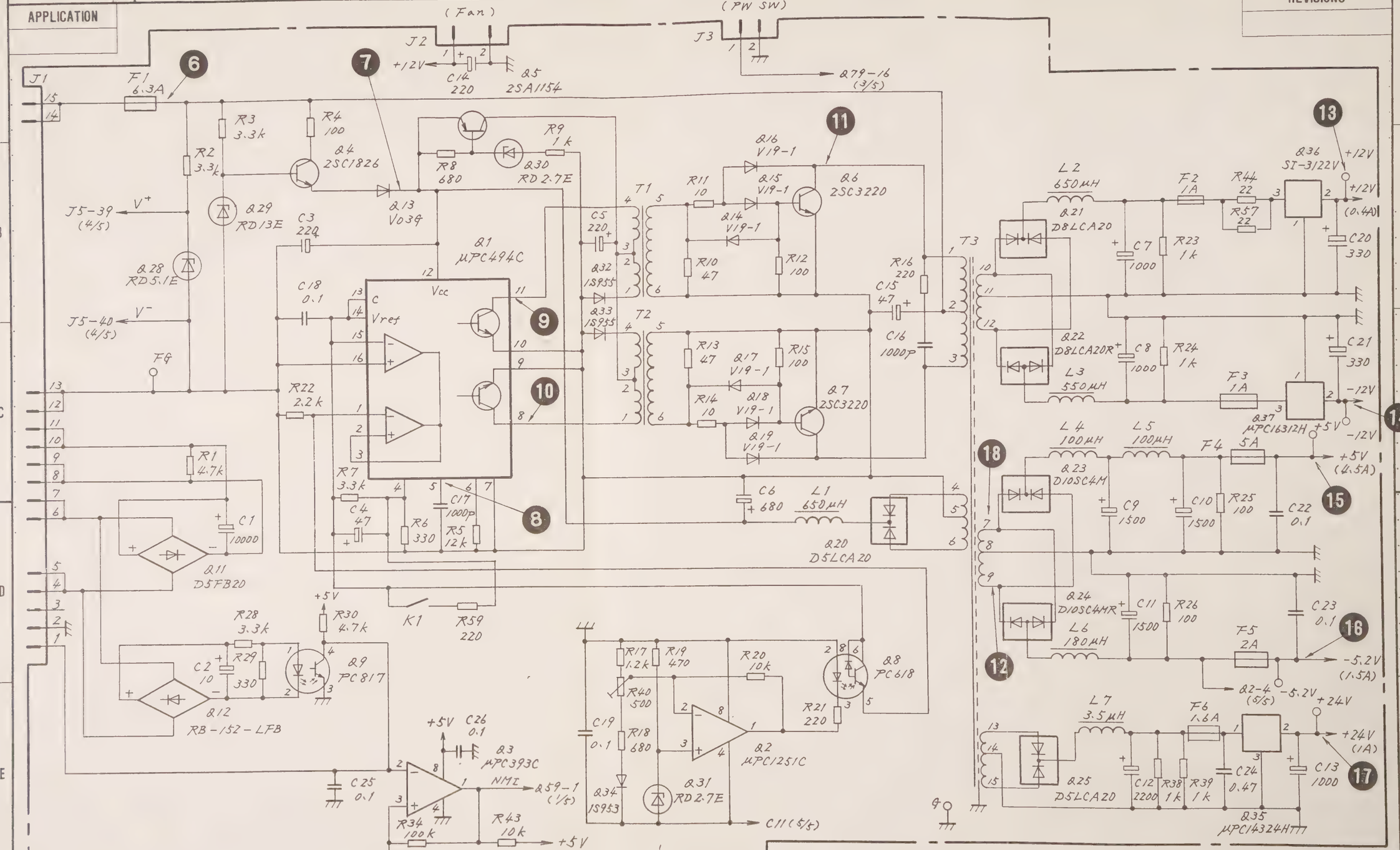

QTY	ITEM	PART No.	DESCRIPTION	MATERIAL	FINISH

CHECKED BY F. Sugata | TRACED BY | SCALE

APPROVED BY E. Sugimoto | DRAWN BY T. Kubota | : | M-1

TITLE A2 R-CONTROL Circuit Diagram. (Receiver)

DRAWING No. 43W37814 5/5

11

DEP

No. D023-1985.08

ANRITSU CORP.

3-137/3-138

3.6.3 A1 ERROR DET PC board 12

(1) Circuit description

Figure 3-74 is the block diagram of this circuit. The A1 ERROR DET circuit consists of INPUT, AGC, B/U CONVERTER, CODE CONVERTER, CLOCK RECOVERY, FRAM synchronization, ERROR DET, OUTPUT, and MEASUREMENT circuits.

Four input circuits (DS-3, DS-1/1C/2, unipolar clock, and unipolar data) shape the waveform of the input signal. The AGC circuit keeps the DS-3, DS-1/1C/2 input signal level constant.

The B/U CONVERTER circuit converts the bipolar signal to a unipolar signal.

The CODE CONVERTER circuit detects errors as well as converts signals with B3ZS, B6ZS, and B8ZS codes to signals without codes.

The clock recovery circuit extracts the clock signal from the unipolar RZ signal.

The frame synchronization circuit synchronizes with the input signal frame and detects the frame errors, parity errors, and CRC-6 errors. The error detection circuit makes bit-by-bit comparison and detects errors after synchronizing the reference pattern signal generated within the input pattern signal.

The MEASUREMENT circuit counts the five types of detected error separately (bit error, frame error, parity error, CRC-6 error, and bipolar error).

CLOCK and DATA are output as the MONITOR output and DATA, CLOCK, ERROR, X-BIT are output as the DS-1 output. The clock signal is also output to the A5 JITTER MEASUREMENT circuit.

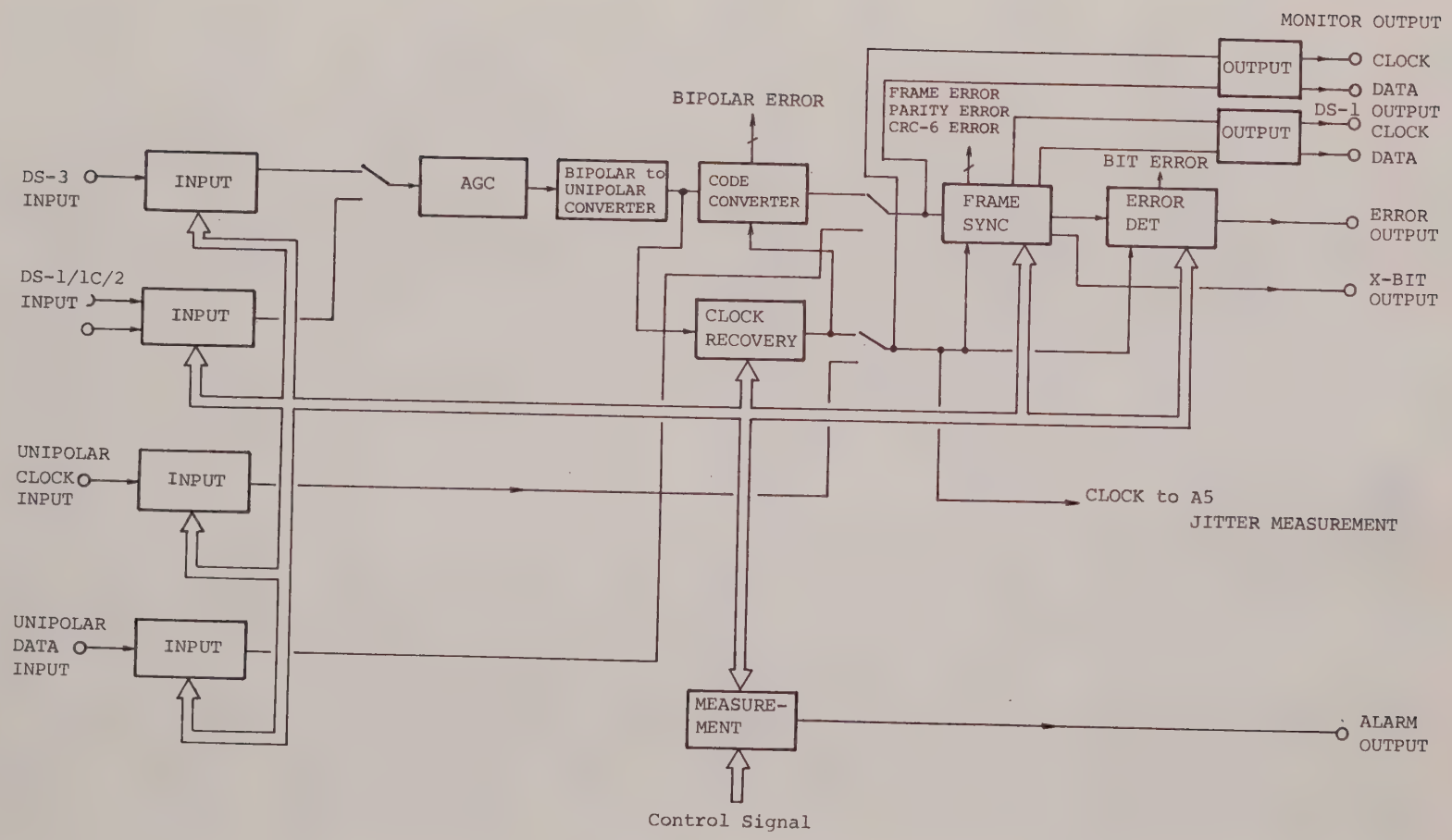

Fig. 3-74 A1 ERROR DET Block Diagram

(2) Troubleshooting and adjustment

(a) Checking DSX-3

Set-up as shown in Fig. 3-75.

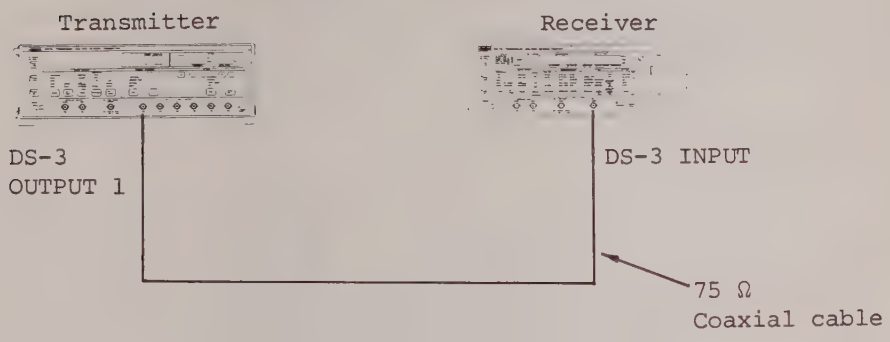

Fig. 3-75 Setup

Set the transmitter and receiver as follows:

Transmitter panel setting

CLOCK	:	DS-3
FRAME	:	FRAMED
PATTERN	:	PRBS
DS-3 LEVEL	:	DSX-3
ERROR ADDITION	:	OFF
JITTER MODULATION	:	OFF
FUNCTION SWITCH A (Rear Panel)	:	All "0"

Receiver panel setting

INPUT	:	DSX-3 H/L
FRAME	:	FRAMED
PATTERN	:	PRBS
FUNCTION SWITCH A, B, C (Rear Panel)	:	All "0"

[Step 1]

Check the waveform at ❷ using an oscilloscope.

The waveform shown in Fig. 3-76 is normal.

If it is normal, proceed to the next step.

If it is abnormal, make the following adjustment.

Adjustment

Adjust R2 so that the waveform at ❷ is as shown in Fig. 3-76.

If the waveform is abnormal after the above adjustment has been made, troubleshoot the circuits related to J8 to (2).

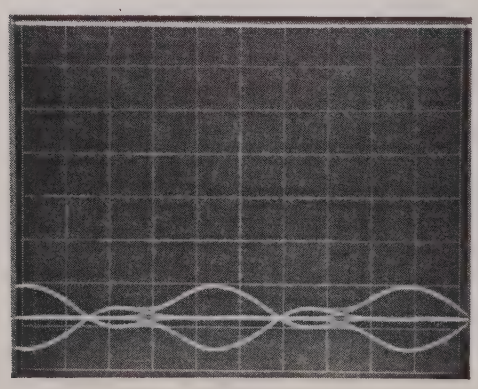

—0 V

V: 1 V/div
H: 5 ns/div

Fig. 3-76 Waveform at ❷

[Step 2]

Check the waveform at ❺ using an oscilloscope.

The waveform shown in Fig. 3-77 is normal.

If it is normal, proceed to the next step.

If it is abnormal, make the following adjustment.

Adjustment

Adjust R49 so that the waveform at ❺ is as shown in Fig. 3-77.

If the waveform is abnormal after the above adjustment has been made, troubleshoot the circuits related to ❷ to ❺.

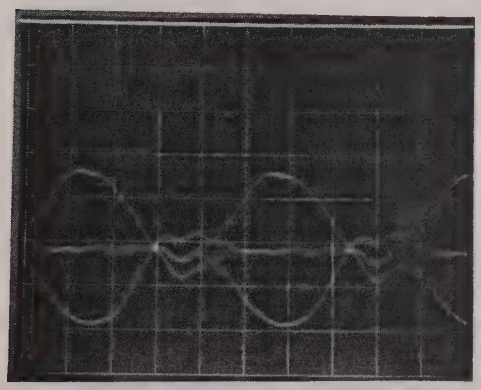

V: 1 V/div
H: 5 ns/div

Fig. 3-77 Waveform at ❺

[Step 3]

Check the waveforms at ❻ and ❼ using the oscilloscope.

The waveforms shown in Fig. 3-78 are normal.

If they are normal, proceed to the next step.

If they are abnormal, make the following adjustment.

Adjustment

1. Adjust R130 so that the waveform at ❻ is as shown in Fig. 3-78.
2. Adjust R118 so that the waveform at ❼ is as shown in Fig. 3-78.

If the waveforms are abnormal after the adjustments described above have been made, troubleshoot the circuits related to ❺ to ❻ and ❺ to ❼.

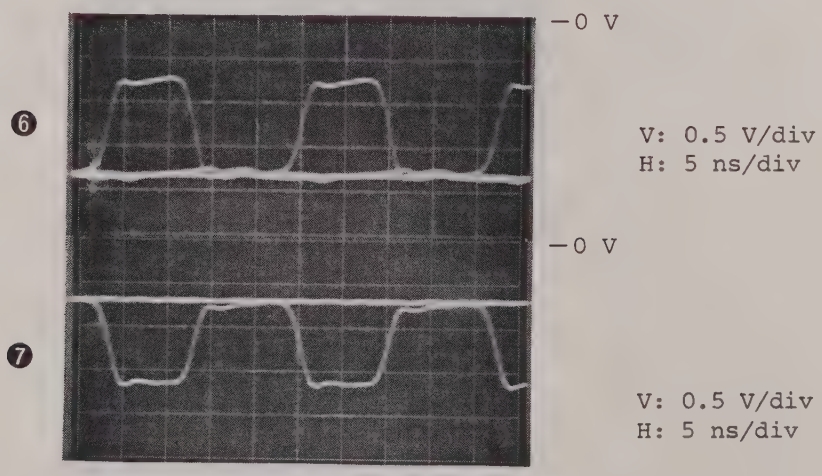

Fig. 3-78 Waveforms at ❻ and ❼

[Step 4]

Check the waveform at ❽ using an oscilloscope probe.

The waveform shown in Fig. 3-79 is normal.

If it is normal, proceed to the next step.

If it is abnormal, troubleshoot the circuits related to ❻ to ❽, and ❼ to ❽.

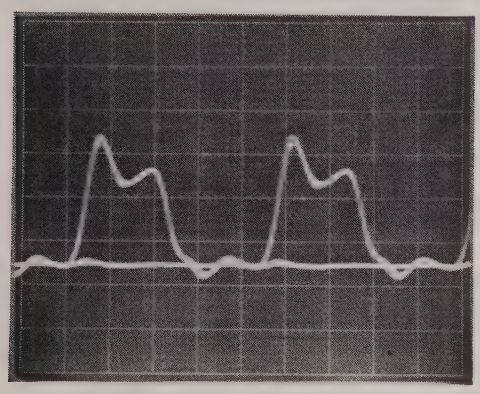

—0 V

H: 0.5 V/div
V: 5 ns/div

Fig. 3-79 Waveform at ❽

[Step 5]

Check the waveform at ❾ using an oscilloscope probe.

The waveform shown in Fig. 3-80 is normal.

If it is normal, proceed to the next step.

If it is abnormal, troubleshoot the circuits related to ❽ and ❾.

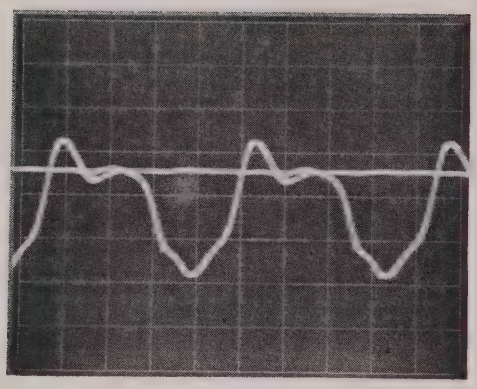

V: 0.5 V/div
H: 5 ns/div

Fig. 3-80 Waveform at ❽

[Step 6]

Check the waveform at ⓫ using an oscilloscope.

The waveform shown in Fig. 3-81 is normal.

Also, remove the cable connected to DS-3 INPUT and check the frequency at ⓫ using a frequency counter.

A frequency of 44.288 to 45.183 MHz is normal.

If it is normal, proceed to the next step.

If it is abnormal, make the following adjustment.

Adjustment

1. Adjust R147 so that the waveform at ⓫ is as shown in Fig. 3-81.
2. Adjust the frequency at ⓫ according to the following procedures.
   - Remove the cable connected to DS-3 INPUT.
   - Counter J12 to the [FSET] side.

- Adjust R144 so that the frequency at ⓫ is 44.288 to 45.183 MHz.
- Connect J12 to [FADJ] side.
- Turn the power switch off and then turn it on again.

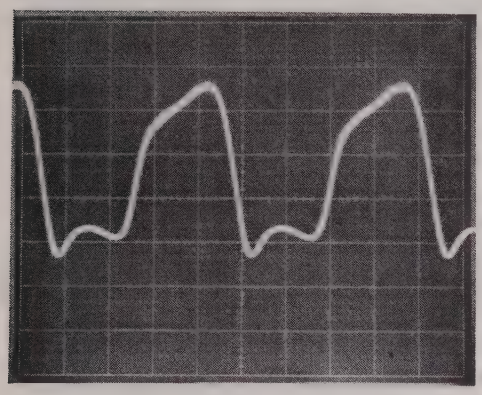

V: 1 V/div
H: 5 ns/div

Fig. 3-81 Waveform at ⓫

[Step 7]

Check the waveforms and phases at ⓬ and ⓭ using an oscilloscope.

The waveforms and phases shown in Fig. 3-82 are normal.

If they are normal, proceed to the next step.

If they are abnormal, troubleshoot the circuits related to Q70 to ⓭, and ❽ to ⓬.

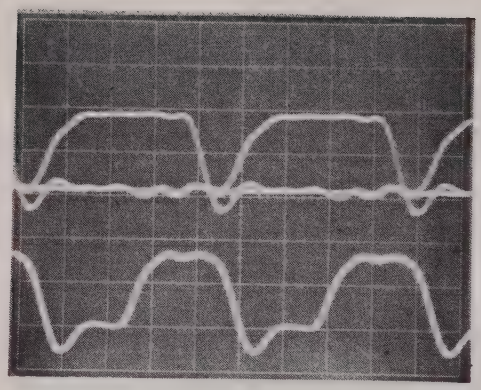

V: 2 V/div
H: 5 ns/div

Fig. 3-82 Waveform at ⓬ and ⓭

[Step 8]

Check the waveforms and phases at ⓰ and ⓱ using an oscilloscope. The waveforms and phases shown in Fig. 3-83 are normal. If they are normal, proceed to the next step.

If they are abnormal, troubleshoot the circuits related to Q95 to ⓰, and Q92 to ⓱.

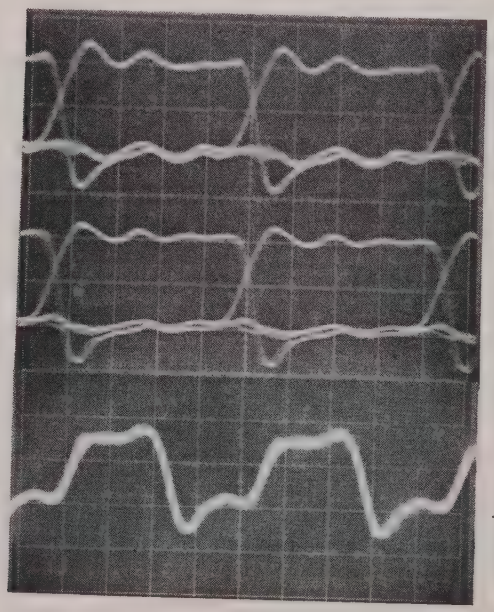

V: 2 V/div
H: 5 ns/div

Fig. 3-83 Waveforms at ⓰ and ⓱

[Step 9]

Check the waveform at ⓲ using an oscilloscope probe.

The waveform shown in Fig. 3-84 is normal.

If it is normal, proceed to the next step.

If it is abnormal, troubleshoot the circuit related to Q90.

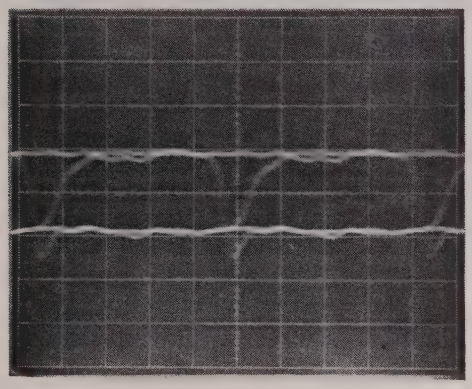

—0 V

V: 2 V/div
H: 5 ns/div

Fig. 3-84 Waveform at ⓲

[Step 10]

Check the waveforms at ⓳, ⓴, ㉑, and ㉒ using an oscilloscope. The waveforms shown in Fig. 3-85 are normal. If they are normal, proceed to the next step.

If they are abnormal, troubleshoot the circuits related to Q90.

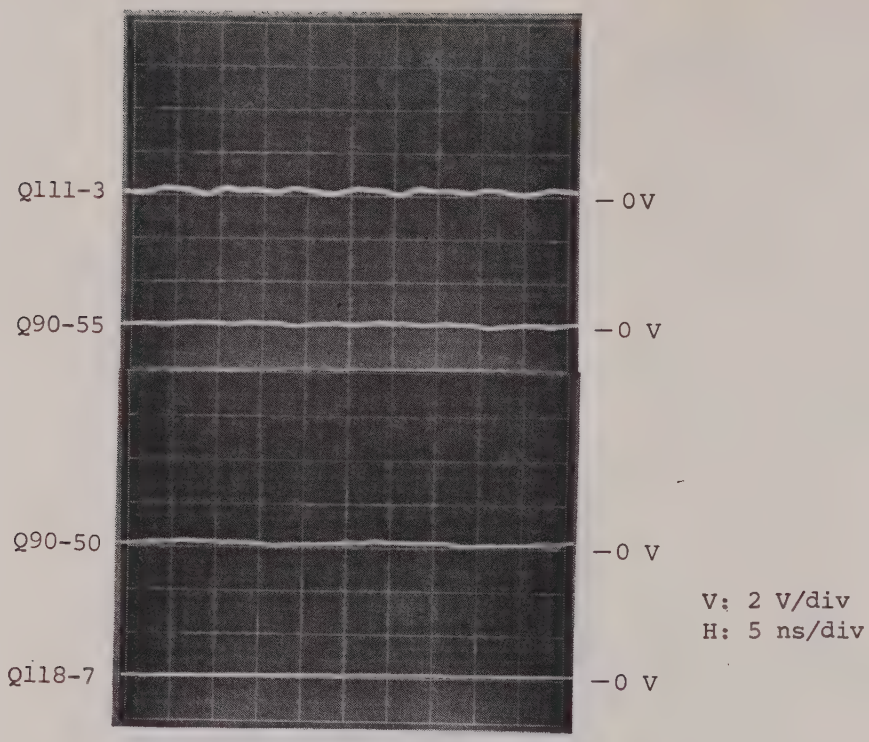

Fig. 3-85 Waveforms at ⓳, ⓴, ㉑, and ㉒

[Step 11]

Check the frequencies at ㉓, ㉔, ㉕, and ㉖ using a frequency counter. The frequencies shown in Table 3-11 are normal. If they are normal, proceed to the next step.

In the following cases, troubleshoot the corresponding circuit.

If ㉓ is abnormal, troubleshoot the circuits related to ⓭ to ㉓

If ㉔ is abnormal, troubleshoot the circuits related to J3-21 to ㉔

If ㉕ is abnormal, troubleshoot the circuits related to J3-21 to ㉕

If ㉖ is abnormal, troubleshoot the circuits related to Q46 to ㉖

Table 3-11 Frequencies at ㉓, ㉔, ㉕ and ㉖

Test point		Frequency
㉓	Q123-18	699 kHz
㉔	Q120-18	2.000 MHz
㉕	Q120-17	100 Hz
㉖	Q46-9	10 Hz

[Step 12]

Check the waveforms at ㉗ using an oscilloscope probe.

The waveforms shown in Fig. 3-86 are normal.

If they are normal, proceed to the next step.

If they are abnormal, troubleshoot the circuits related to ⑳ to ㉗.

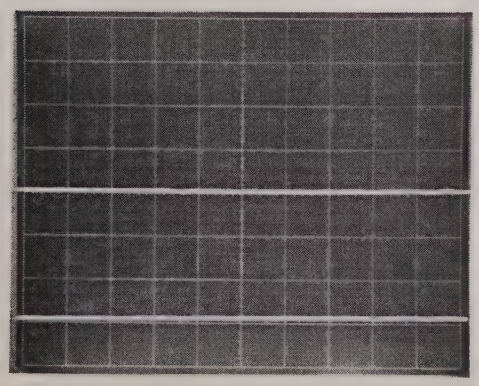

Fig. 3-86 Waveforms at ㉗

[Step 13]

Set the receiver INPUT to UNIPOLAR.

Check the voltage at ㉘ using a DC voltmeter.

A voltage of +9.8 to +10.2 V is normal.

If it is normal, proceed to the next step.

If it is abnormal, make the following adjustment.

Adjustment

1. Adjust the voltage at Q91-7 to +2.70 using R186.
2. Adjust the voltage at Q73-6 to +10.0 V using R188.

If the voltage is abnormal after the above adjustments have been made, troubleshoot the circuits related to J3 to ㉘.

[Step 14]

Check the voltage at ㉚ using an oscilloscope.

The voltages shown in Table 3-12 are normal.

If they are normal, DSX-3 is normal.

Table 3-12 Voltages at 3-12 ㉚

	Voltage
Q96-10	H
Q96-11	H
Q96-12	H
Q96-13	H

H: +2 V to +5 V

(b) Checking DS-3

Set-up as shown in Fig. 3-75. Set the transmitter and receiver as follows:

Transmitter panel setting

CLOCK	:	DS-3
FRAME	:	FRAMED
PATTERN	:	PRBS
DS-3 LEVEL	:	HIGH
ERROR ADDITION	:	OFF
JITTER MODULATION	:	OFF
FUNCTION SWITCH A (Rear Panel)	:	All "0"

Receiver panel setting

INPUT	:	DS-3 H/L
FRAME	:	FRAMED
PATTERN	:	PRBS
FUNCTION SWITCH, A, B, C (Rear Panel)	:	All "0"

[Step 1]

Check the waveform ❶ using an oscilloscope.

The waveform shown in Fig. 3-87 is normal.

If it is normal, check paragraph 3.6.3 (2) (a) step 2 and subsequent steps.

If all are normal, DS-3 is normal.

If they are abnormal, troubleshoot the circuits related to J8 to ❶.

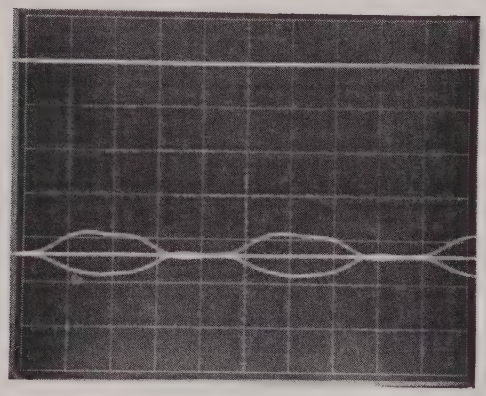

V: 2 V/div
H: 5 ns/div

Fig. 3-87 Waveform at ❶

(c) Checking DS-2

Set-up as shown in Fig. 3-88.

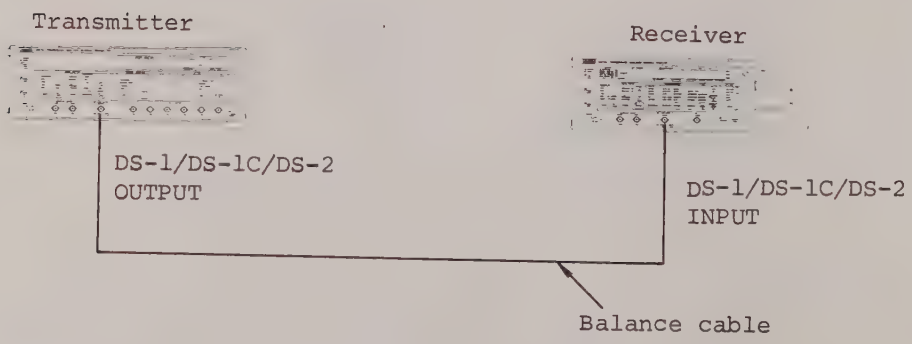

Fig. 3-88 Setup

Set the transmitter and receiver as follows:

Transmitter panel setting

CLOCK	:	DS-2
FRAME	:	FRAMED
PATTERN	:	PRBS
ERROR ADDITION	:	OFF
JITTER MODULATION	:	OFF
FUNCTION SWITCH A (Rear Panel)	:	All "0"

Receiver panel setting

INPUT	:	DS-2
FRAME	:	FRAMED
PATTERN	:	PRBS
FUNCTION SWITCH, A, B, C (Rear Panel)	:	All "0"

[Step 1]

Check the waveform at ❹ using an oscilloscope probe.

The waveform shown in Fig. 3-89 is normal.

If it is normal, proceed to the next step.

If it is abnormal, troubleshoot the circuits related to J7 to ❹.

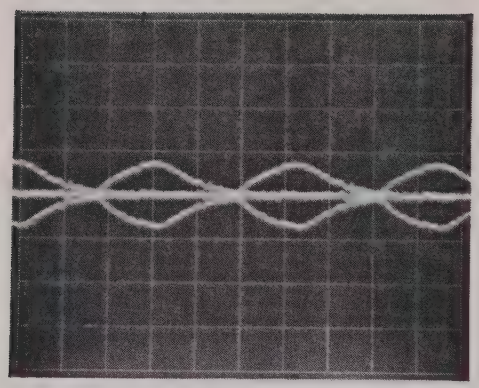

Fig. 3-89 Waveform at ❹

[Step 2]

Check the waveform at ⓫ using an oscilloscope.

The waveform shown in Fig. 3-90 is normal. Also, remove the cable connected to DS-1/1C/2 INPUT and check the frequency at ⓫ using a frequency counter.

A frequency of 6.248 to 6.375 MHz is normal.

If it is normal, check the other items.

If it is abnormal, make the following adjustments.

Adjustment

1. Adjust R158 so that the waveform at ⓫ is as shown in Fig. 3-90.
2. Adjust the frequency at ⓫ using the following procedure.
   - Remove the cable connected to DS-1/1C/2 INPUT.
   - Connect J12 to the [FSET] side.

- Adjust R155 so that the frequency at ⓫ is 6.248 to 6.375 MHz.
- Connect J12 to the [FADJ] side.
- Turn the power switch off and then turn it on again.

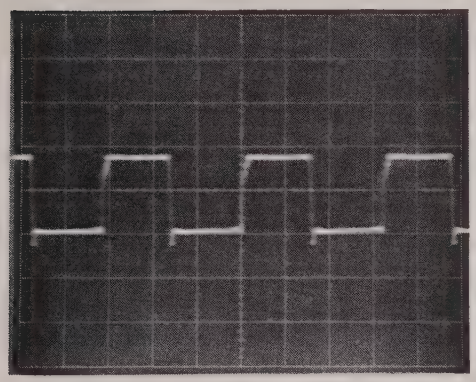

V: 2 V/div
H: 50 ns/div

Fig. 3-90 Waveform at ⓫

(d) Checking DS-1C

Set-up as shown in Fig. 3-88.

Set the transmitter and receiver as follows:

Transmitter panel setting

CLOCK	:	DS-1C
FRAME	:	FRAMED
PATTERN	:	PRBS
ERROR ADDITION	:	OFF
JITTER MODULATION	:	OFF
FUNCTION SWITCH A (Rear Panel)	:	All "0"

Receiver panel setting

INPUT	:	DS-1C
FRAME	:	FRAMED
PATTERN	:	PRBS
FUNCTION SWITCH, A, B, C (Rear Panel)	:	All "0"

[Step 1]

Check the waveform at ❹ using an oscilloscope probe.

The waveform shown in Fig. 3-91 is normal.

If it is normal, proceed to the next step.

If it is abnormal, troubleshoot the circuits related to J7 to ❹.

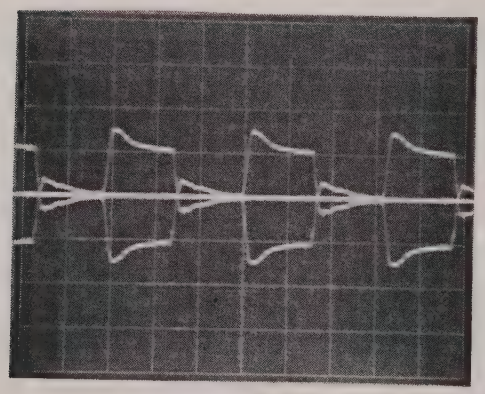

V: 0.2 V/div
H: 100 ms/div

Fig. 3-91 Waveform at ❹

[Step 2]

Check the waveform at ⓫ using an oscilloscope probe.

The waveform shown in Fig. 3-92 is normal.

Also, remove the cable connected to DS-1/1C/2 INPUT and check the frequency at ⓫ using a frequency counter.

A frequency of 3.120 to 3.183 MHz is normal.

If it is normal, check other items.

If it is abnormal, make the following adjustment.

Adjustment

1. Adjust R169 so that the waveform at ⓫ is as shown in Fig. 3-92.
2. Adjust the frequency at ⓫ using the following procedure.
   - Remove the cable connected to DS-1/1C/2 INPUT.
   - Connect J12 to the [FSET] side.
   - Adjust R166 so that the frequency at ⓫ is 3.120 to 3.183 MHz.
   - Connect J12 to the [FADJ] side.
   - Turn the power switch off and then turn it on again.

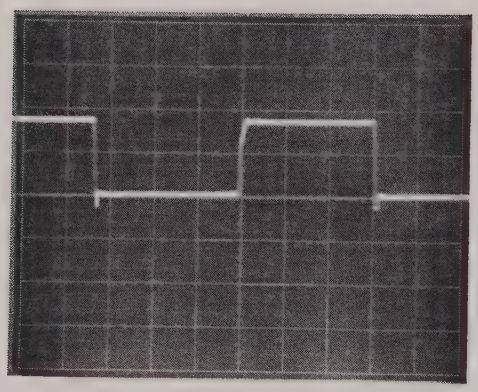

V: 2 V/div
H: 50 ns/div

Fig. 3-92 Waveform at ⓫

(e) Checking DS-1

Set-up as shown in Fig. 3-88.

Set the transmitter and receiver as follows:

Transmitter panel setting

CLOCK	:	DS-1
FRAME	:	FRAMED, D4
PATTERN	:	PRBS
ERROR ADDITION	:	OFF
JITTER MODULATION	:	OFF
FUNCTION SWITCH A (Rear Panel)	:	All "0"

Receiver panel setting

INPUT	:	DS-1
FRAME	:	FRAMED, D4
PATTERN	:	PRBS
FUNCTION SWITCH, A, B, C (Rear Panel)	:	All "0"

[Step 1]

Check the waveform at ❸ using an oscilloscope probe.

The waveform shown in Fig. 3-93 is normal.

If it is normal, proceed to the next step.

If it is abnormal, troubleshoot the circuits related to J7 to ❸.

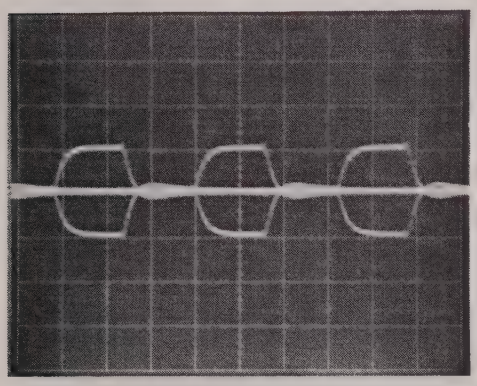

V: 0.2 V/div
H: 200 ns/div

Fig. 3-93 Waveform at ❸

[Step 2]

Check the waveform at ⓫ using an oscilloscope probe.

The waveform shown in Fig. 3-94 is normal.

Also, remove the cable connected to DS-1/1C/2 INPUT and check the frequency at ⓫ using a frequency counter.

A frequency 1.528 to 1.559 MHz is normal.

If it is normal, check the other items.

If it is abnormal, make the following adjustment.

Adjustment

1. Adjust R176 so that the waveform at ⓫ is as shown in Fig. 3-94.

2. Adjust the frequency at ⓫ using the following procedure.

   . Remove the cable connected to DS-1/1C/2 INPUT.

   . Connect J12 to the [FSET] side.

   . Adjust R180 so that the frequency at ⓫ is 1.528 to 1.559 MHz.

   . Connect J12 to the [FADJ] side.

   . Turn the power switch off and then turn it on again.

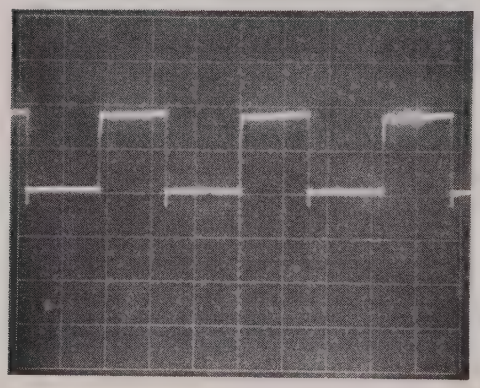

V: 2 V/div
H: 200 ns/div

Fig. 3-94 Waveform at ⓫

(f) Checking unipolar

Set-up as shown in Fig. 3-95.

Set the transmitter and receiver as follows:

Transmitter panel setting

CLOCK	:	DS-3
FRAME	:	FRAMED
PATTERN	:	PRBS
ERROR ADDITION	:	OFF
JITTER MODULATION	:	OFF
UNIPOLAR OUTPUT LEVEL (Rear panel)	:	+1/-1 V
FUNCTION SWITCH A (Rear Panel)	:	All "0"

Receiver panel setting

INPUT	:	UNIPOLAR
FRAME	:	FRAMED
PATTERN	:	PRBS
UNIPOLAR INPUT LEVEL (Rear Panel)	:	+1/-1 V
UNIPOLAR INPUT MODE (Rear Panel)	:	FUNCTION SWITCH A1, A2: "0"
FUNCTION SWITCH, A, B, C (Rear Panel)	:	All "0"

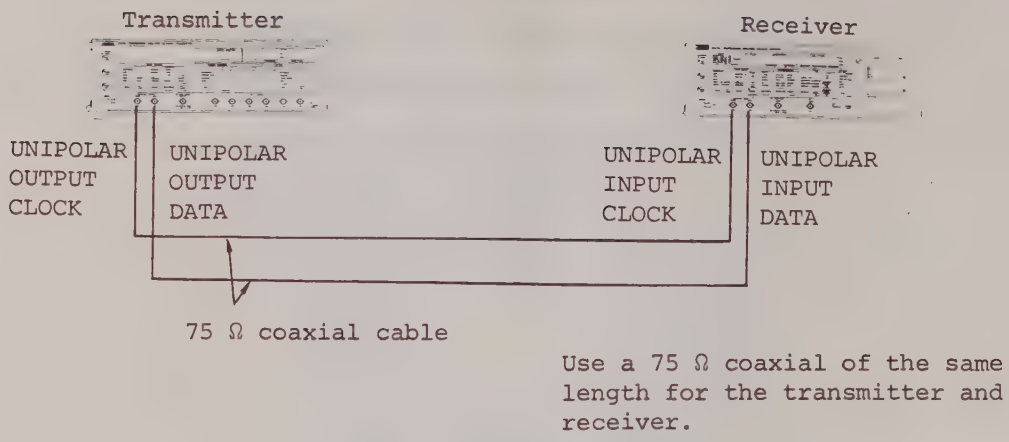

Use a 75 Ω coaxial of the same length for the transmitter and receiver.

Fig. 3-95 Setup

[Step 1]

Check the waveform at ⓮ using an oscilloscope.

The waveform shown in Fig. 3-96 is normal.

If it is normal, proceed to the next step.

If it is abnormal, make the following adjustment.

Adjustment

Adjust R70 so that the waveform at ⓮ is as shown in Fig. 3-96.

Note:

If the input level is TTL, adjust R69.
If it is ECL, adjust R73.

If the waveform is abnormal after the adjustment has been made, troubleshoot the circuits related to J6 to ⓮.

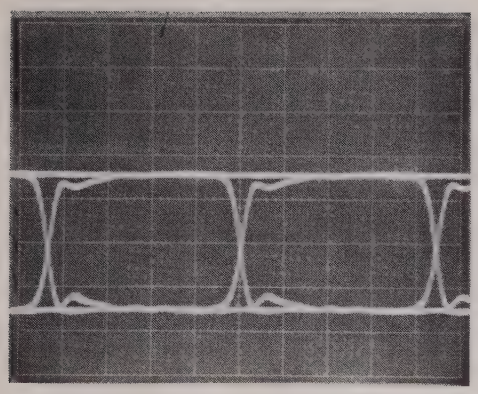

V: 0.5 V/div
H: 5 ns/div

Fig. 3-96 Waveform at ⓮

[Step 2]

Check the waveform at ⓯ using an oscilloscope.

The waveform shown in Fig. 3-97 is normal.

If it is normal, check the other items.

If it is abnormal, make the following adjustment.

Adjustment

Adjust R107 so that the waveform at ⓯ is as shown in Fig. 3-97.

If the waveform is abnormal after the above adjustment has been made, troubleshoot the circuits related to J5 to ⓯.

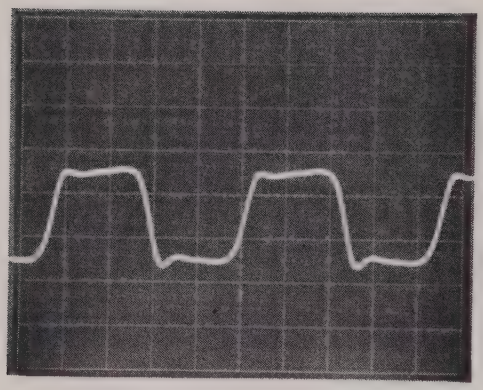

—0 V

V: 0.5 V/div
H: 5 ns/div

Fig. 3-97 Waveform at ⓯

(g) Checking control signal

Receiver panel setting

INPUT	:	DSX-1 H/L
FRAME	:	FRAMED
PATTERN	:	PRBS
DEMUX	:	OFF
ERROR	:	BIT
FUNCTION SWITCH, A, B, C (Rear Panel)	:	All "0"

[Step 1]

Check the voltages at ㉙ using an oscilloscope.

The voltages shown in Table 3-13 are normal.

If they are normal, the control signal is normal.

If they are abnormal, troubleshoot the circuits related to J3 to ㉙.

Table 3-13 Voltages at ㉙

Measurement point	Voltages at ㉙
Q96-4	H
Q96-3	H
Q96-2	L
Q96-1	L
Q96-40	L
Q96-39	L
Q96-38	H
Q96-37	L
Q96-18	H
Q96-19	H
Q96-20	H
Q96-21	H
Q96-22	H
Q96-23	L
Q96-24	L
Q96-25	L
Q96-14	H
Q96-15	H
Q96-16	H

H: +2 to +5 V

L: +0.5 V or less

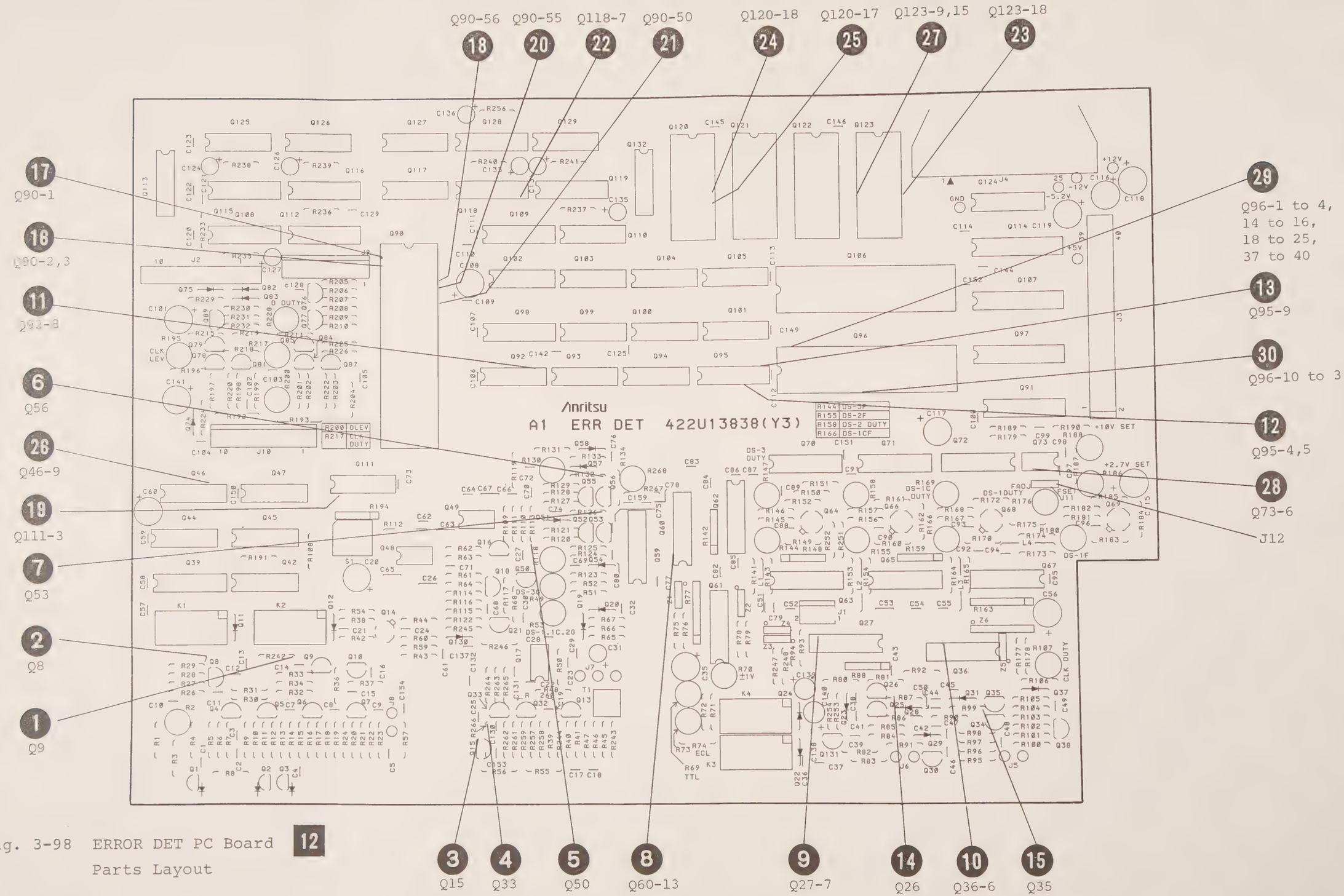

Fig. 3-98 ERROR DET PC Board 12
Parts Layout

APPLICATION

REVISIONS

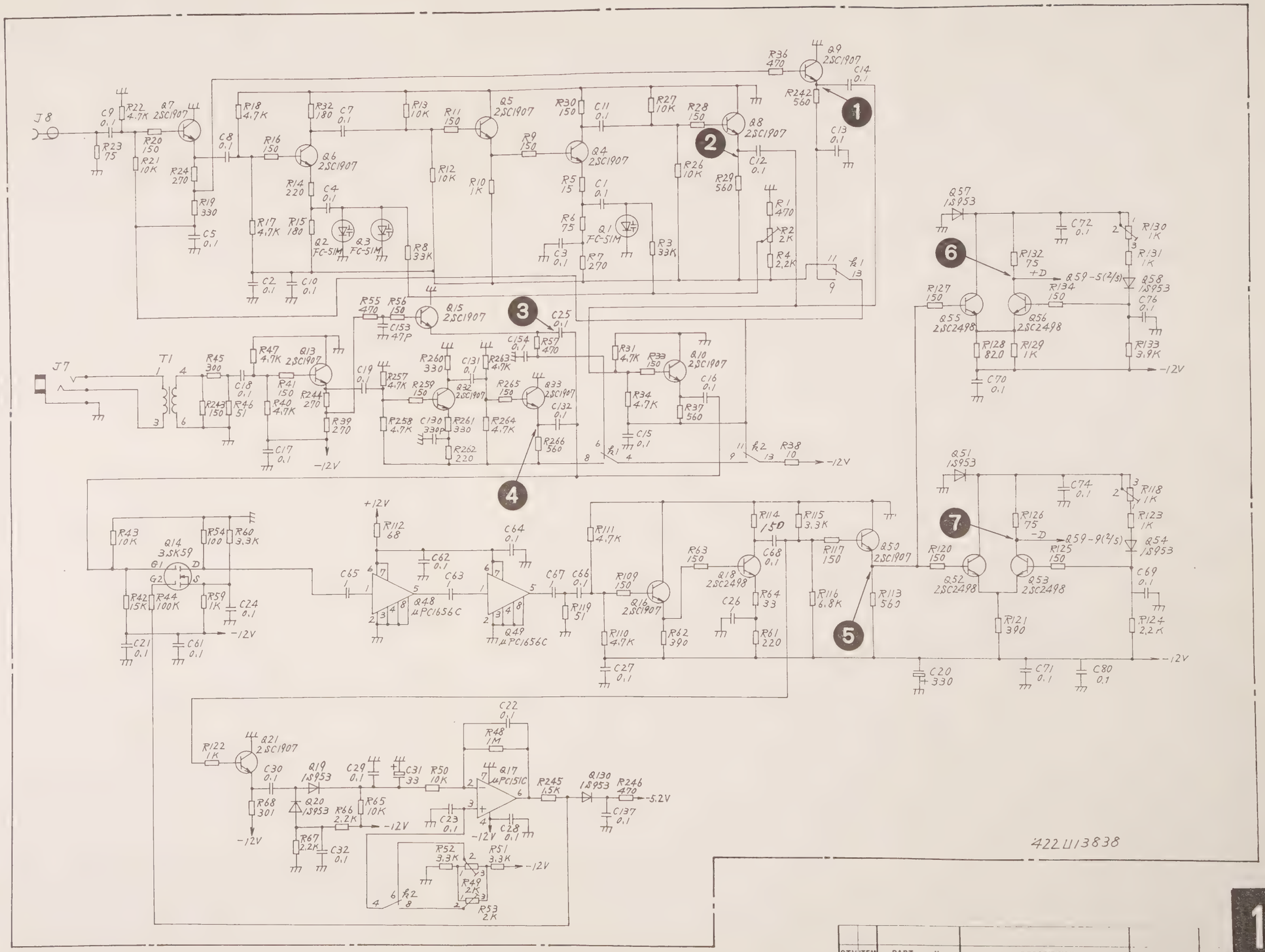

Parts List 44W88390

QTY	ITEM	PART No.	DESCRIPTION	MATERIAL	FIN

CHECKED BY F. Sugimoto
APPROVED BY E. Sugimoto
TRACED BY
DRAWN BY T. Kyboto
SCALE M-2
TITLE A1 ERROR DET Circuit Diagram. (Receiver)
DRAWING No 43W36040 1/5

12

DEP

No 0021 1985/08

ANRITSU CORP 3-169/3-170

APPLICATION

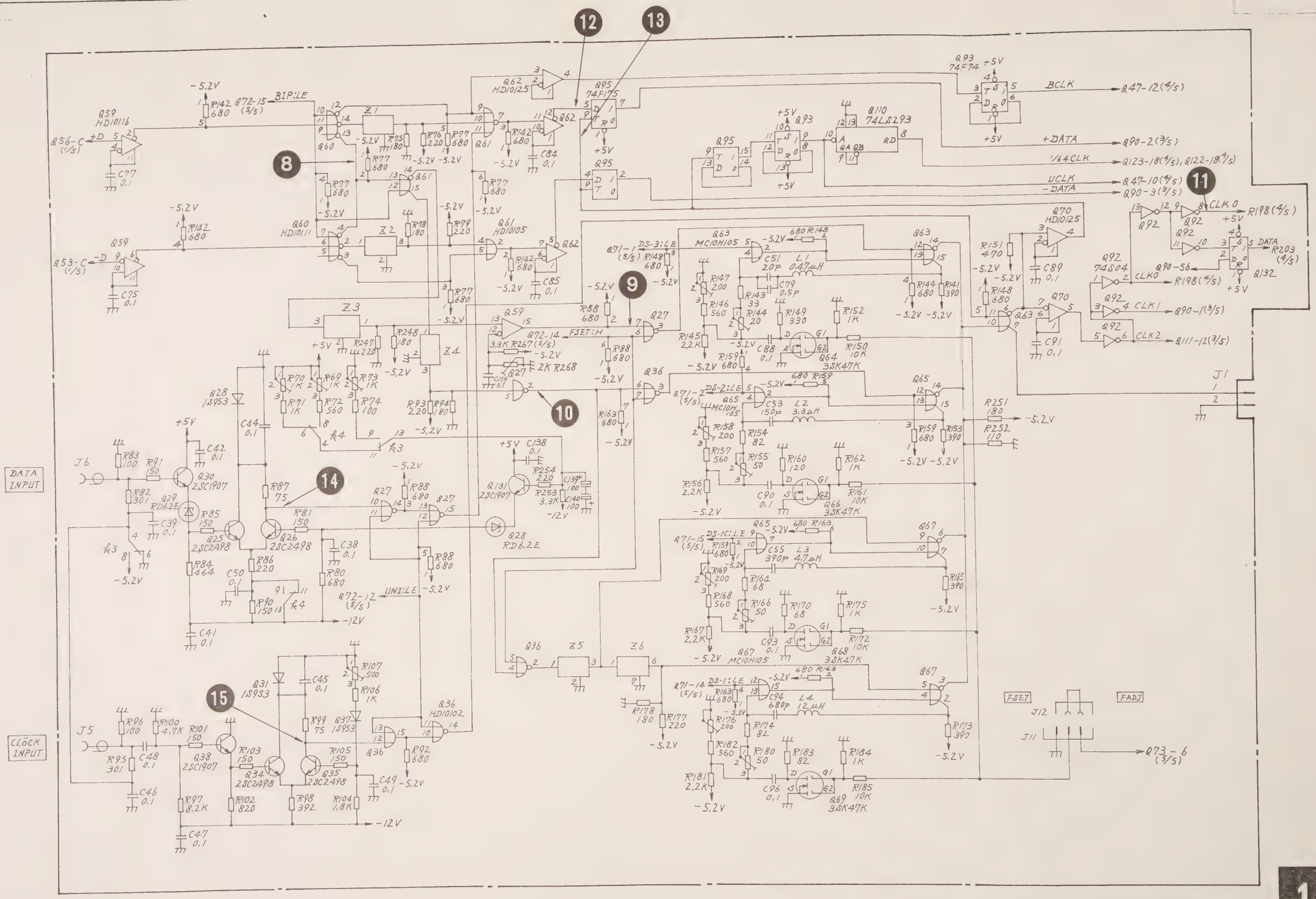

QTY	ITEM	PART No.	DESCRIPTION	MATERIAL	FIN

CHECKED BY F. Sugata
TRACED BY
SCALE
APPROVED BY E. Sugimoto
DRAWN BY T Kubota

TITLE A1 ERROR DET Circuit Diagram. (Receiver)

DRAWING No. 43W 36040 2/5

12

DEP

No 0021 1985 08

ANRITSU CORP. 3-171/3-172

APPLICATION

REVISIONS

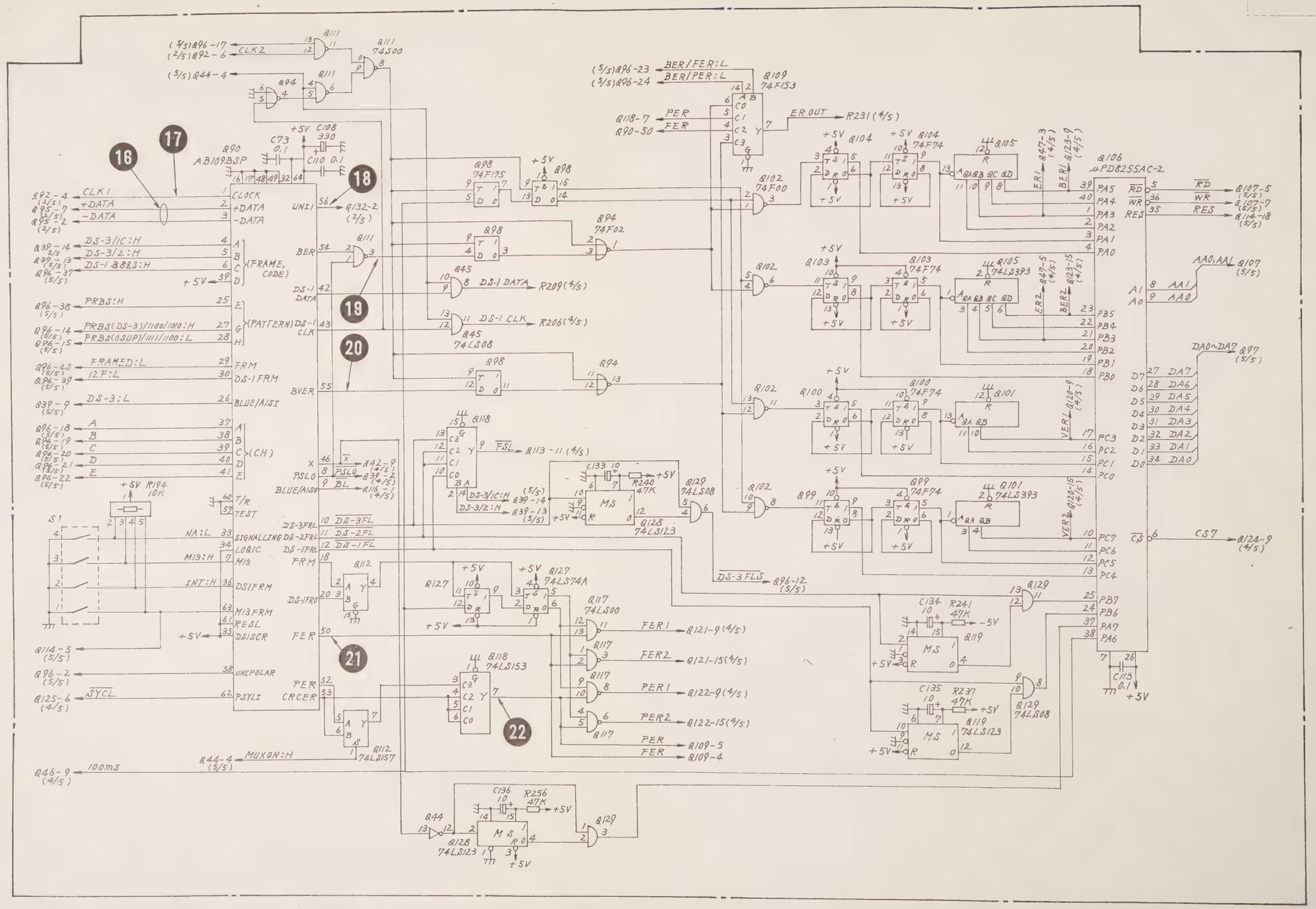

QTY	ITEM	PART No.	DESCRIPTION	MATERIAL	FIN

CHECKED BY F Sugata
APPROVED BY E Sugimoto
TRACED BY
DRAWN BY T Kubota
SCALE

TITLE A1 ERROR DET Circuit Diagram. (Receiver)

DRAWING No 43W 36040 3/5

12

DEP

No 0021-1985 08

ANRITSU CORP. 3-173/3-174

APPLICATION

REVISIONS

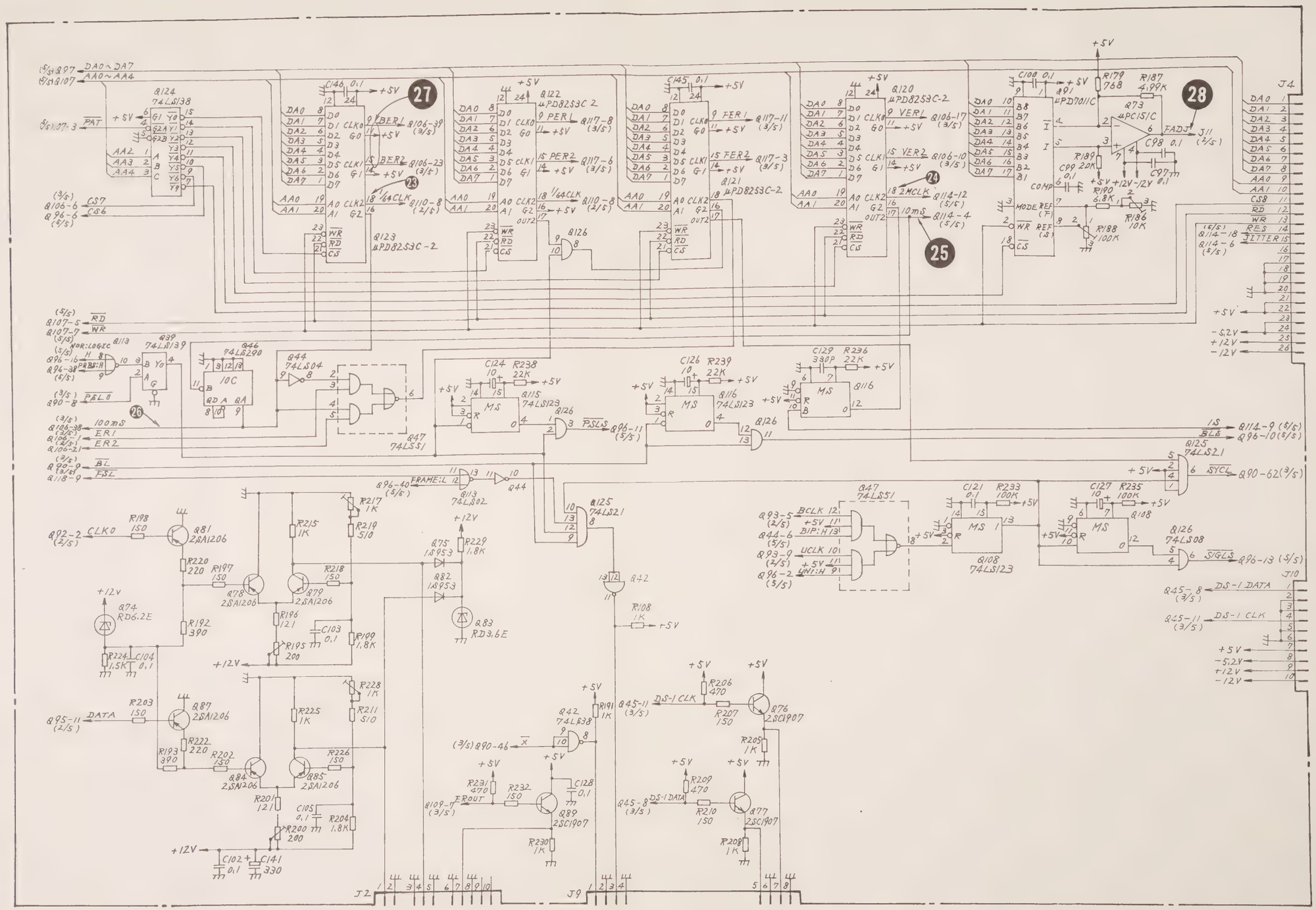

QTY	ITEM	PART No.	DESCRIPTION	MATERIAL	FIN

CHECKED BY F. Sugata | TRACED BY | SCALE

APPROVED BY E. Sugimoto | DRAWN BY T. Kubota

TITLE A1 ERROR DET Circuit Diagram. (Receiver)

DRAWING No. 43W36040 4/5

12

ANRITSU CORP. 3-175/3-176

No 0021 1985 08

APPLICATION

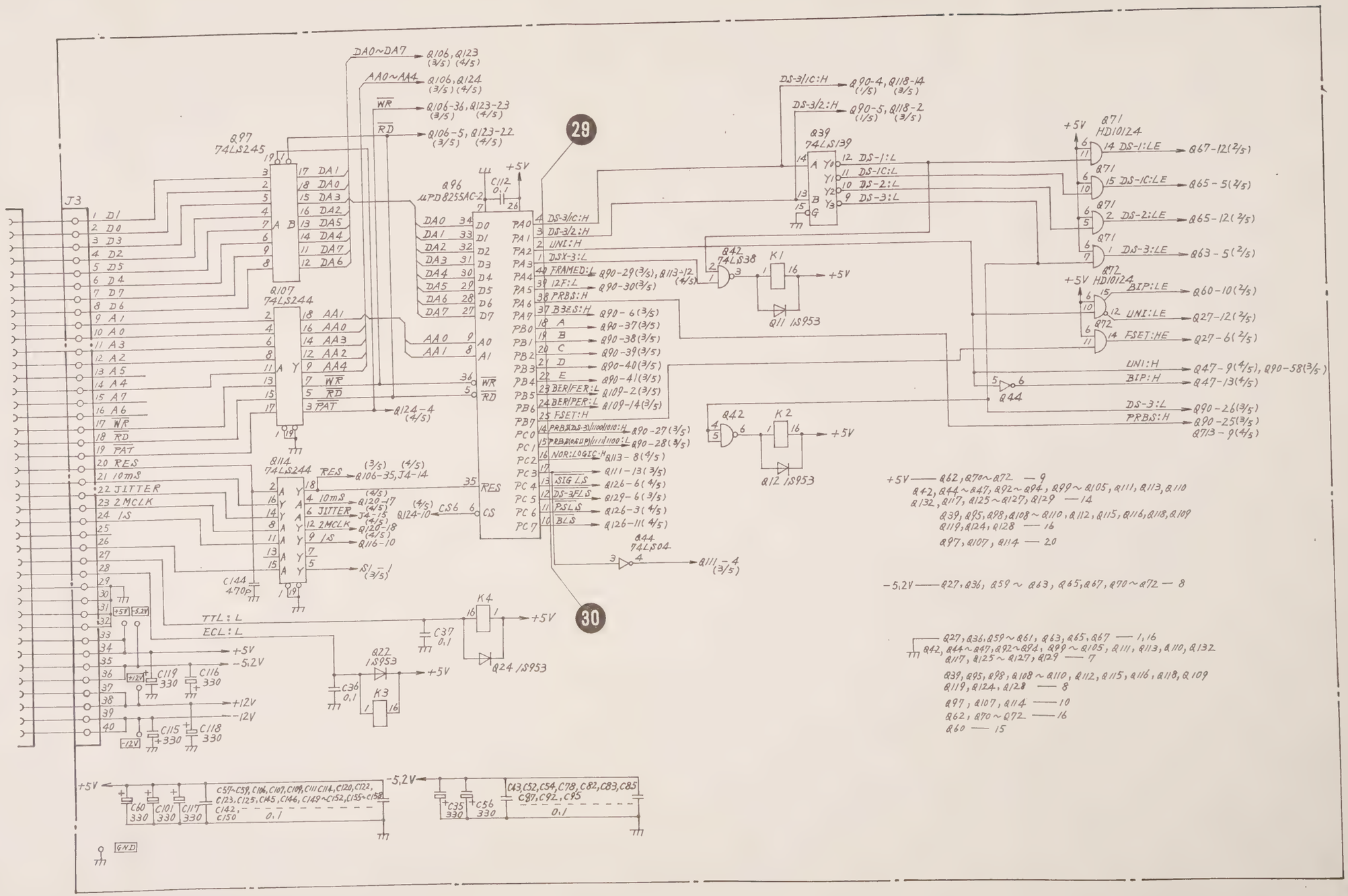

QTY	ITEM	PART No.	DESCRIPTION	MATERIAL	FIN

CHECKED BY F. Sugata — TRACED BY — SCALE

APPROVED BY E. Sugimoto — DRAWN BY T. Kubota

TITLE A1 ERROR DET Circuit Diagram. (Receiver)

DRAWING No. 43W 36040 5/5

12

DEP

No D021 1985 08

ANRITSU CORP. 3-177/3-17

3.6.4 A3 R-DISPLAY PC board 13

(1) Circuit description

The A3 R-DISPLAY circuit consists of a detection circuit of the front-panel switch status, and driver circuit for LEDs and the digital display.

(2) Troubleshooting and adjustment

[Step 1]

Check the waveforms at ❶ using an oscilloscope probe.

The waveforms shown in Fig. 3-99 are normal.

If they are normal, proceed to the next step.

If they are abnormal, troubleshoot the circuit related to Q1.

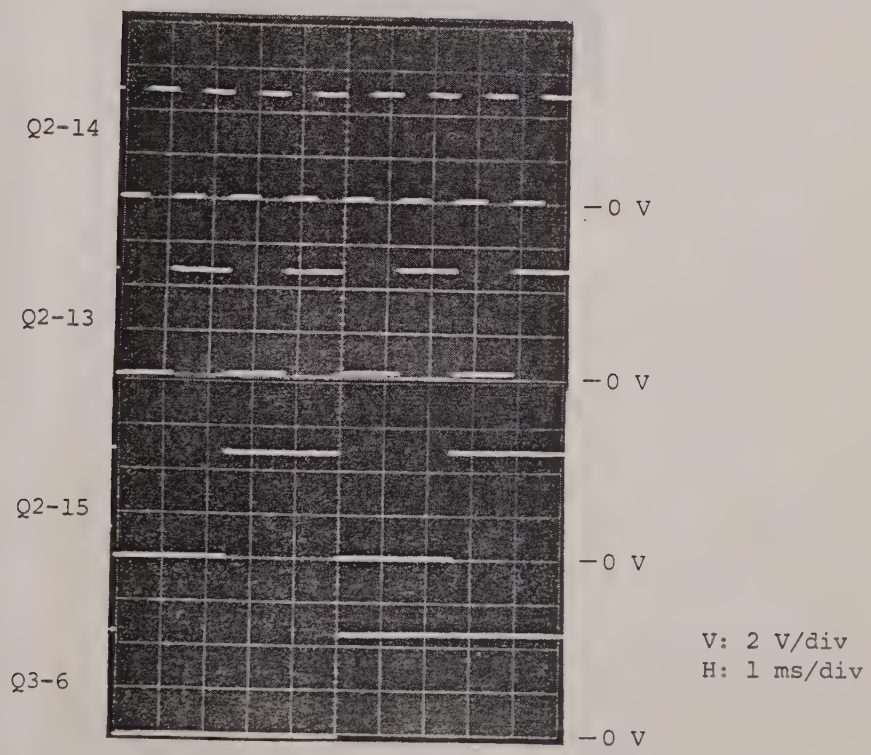

Fig. 3-99 Waveform at ❶

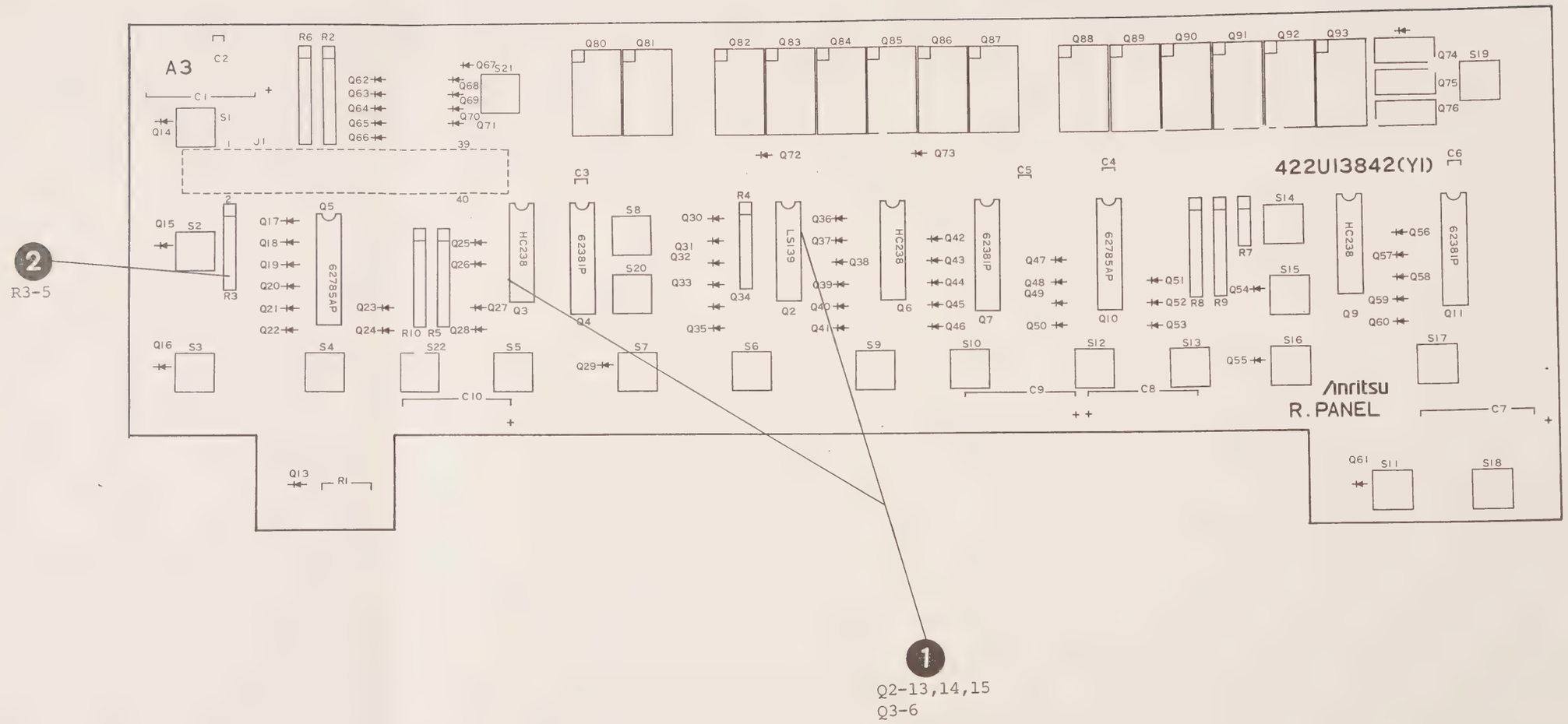

Fig. 3-101 R-DISPLAY PC Board Parts Layout

(3-181 blank)/3-182

43W36042 1/3

APPLICATION

REVISIONS

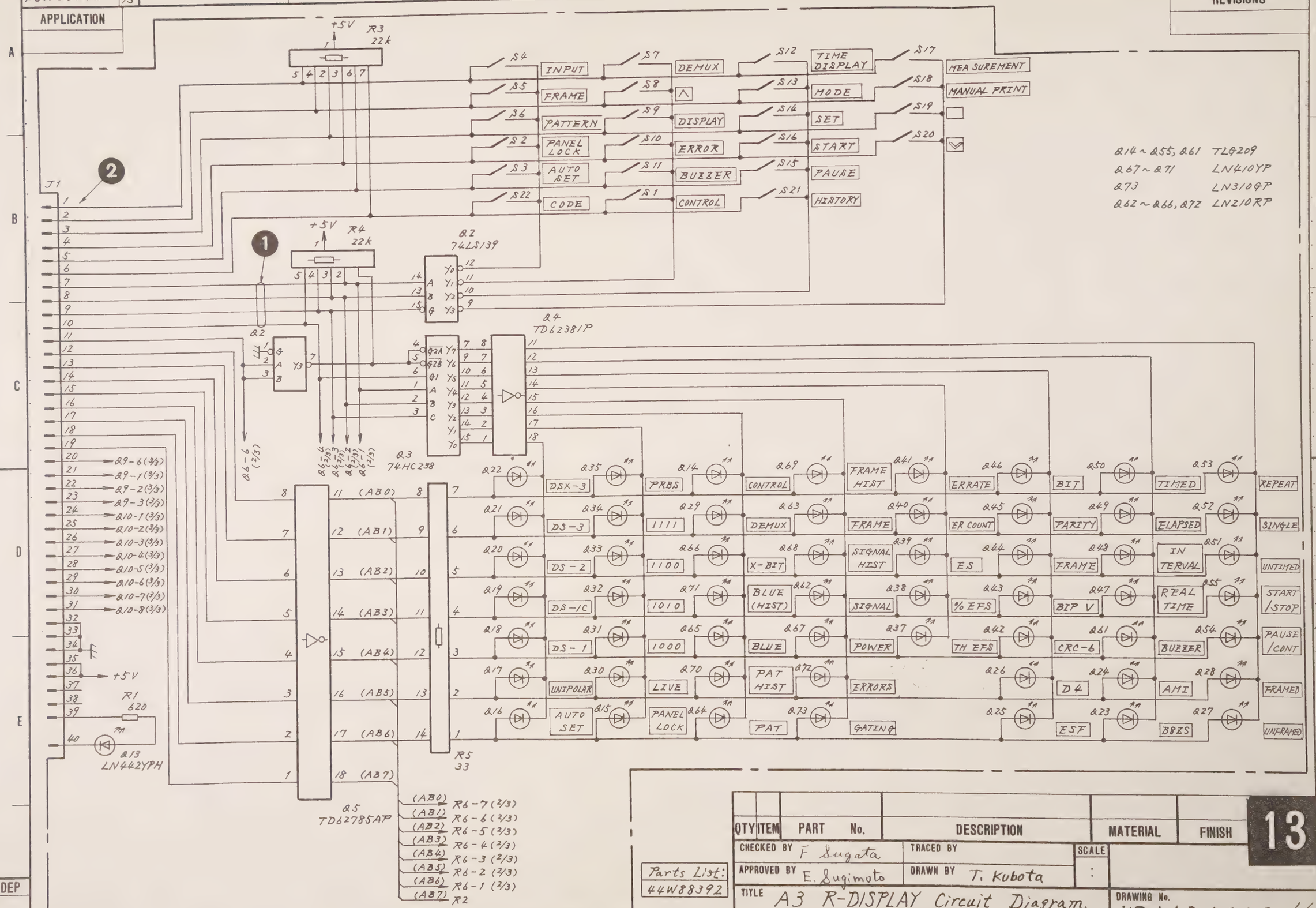

Parts List: 44W88392

QTY	ITEM	PART No.	DESCRIPTION	MATERIAL	FINISH

CHECKED BY F. Sugata | TRACED BY | SCALE :

APPROVED BY E. Sugimoto | DRAWN BY T. Kubota

TITLE A3 R-DISPLAY Circuit Diagram. (Receiver)

DRAWING No. 43W36042 1/3

13

DEP

No. 0023-1985.08

ANRITSU CORP.

43W36042 2/3

APPLICATION

REVISIONS

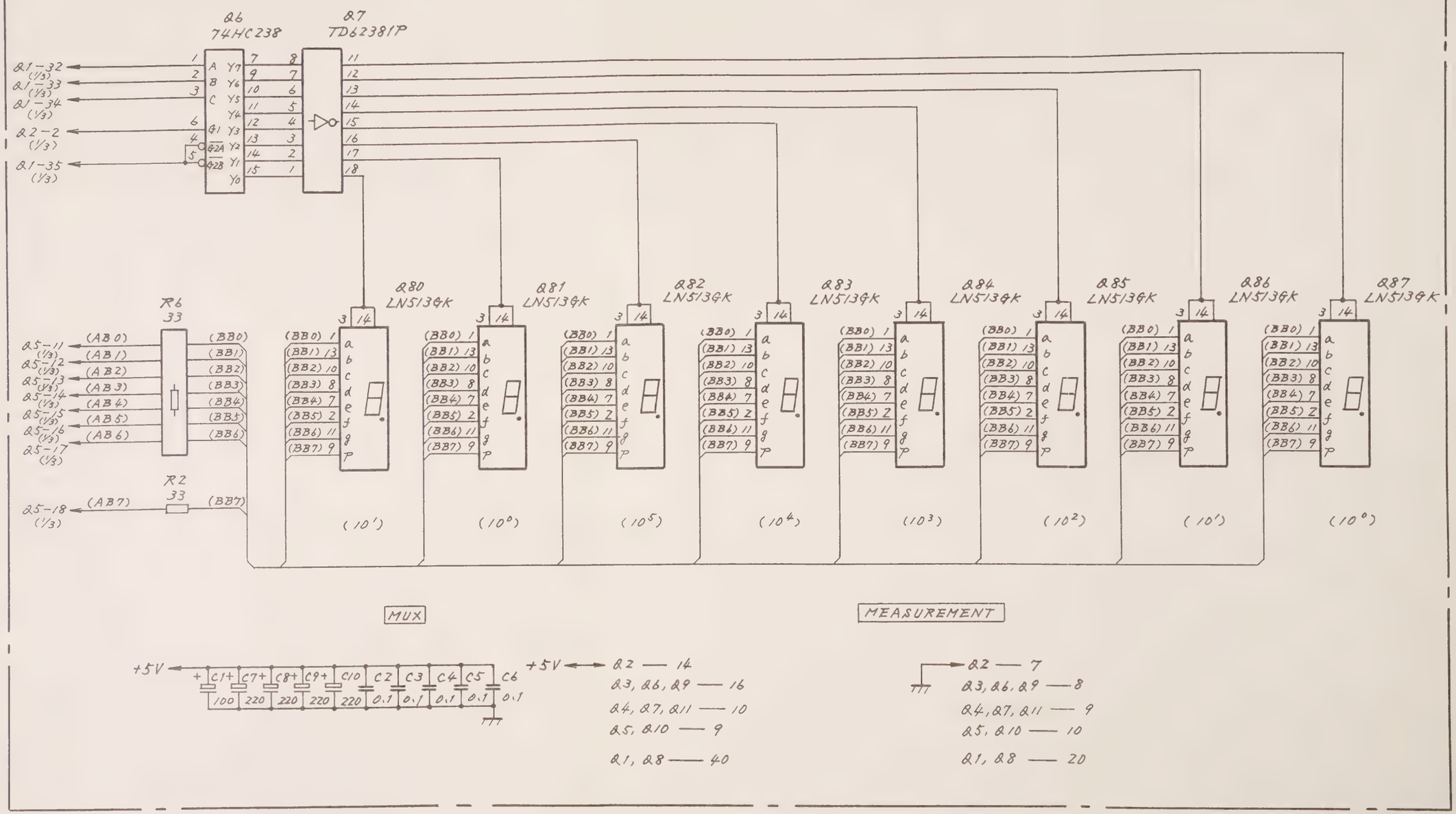

QTY	ITEM	PART No.	DESCRIPTION	MATERIAL	FINISH

13

CHECKED BY F. Sugata

TRACED BY

SCALE :

APPROVED BY E. Sugimoto

DRAWN BY T. Kubota

TITLE A3 R-DISPLAY Circuit Diagram (Receiver)

DRAWING No. 43W36042 2/3

DEP

No. 0023-1985.08

ANRITSU CORP.

43W36042 3/3

APPLICATION

REVISIONS

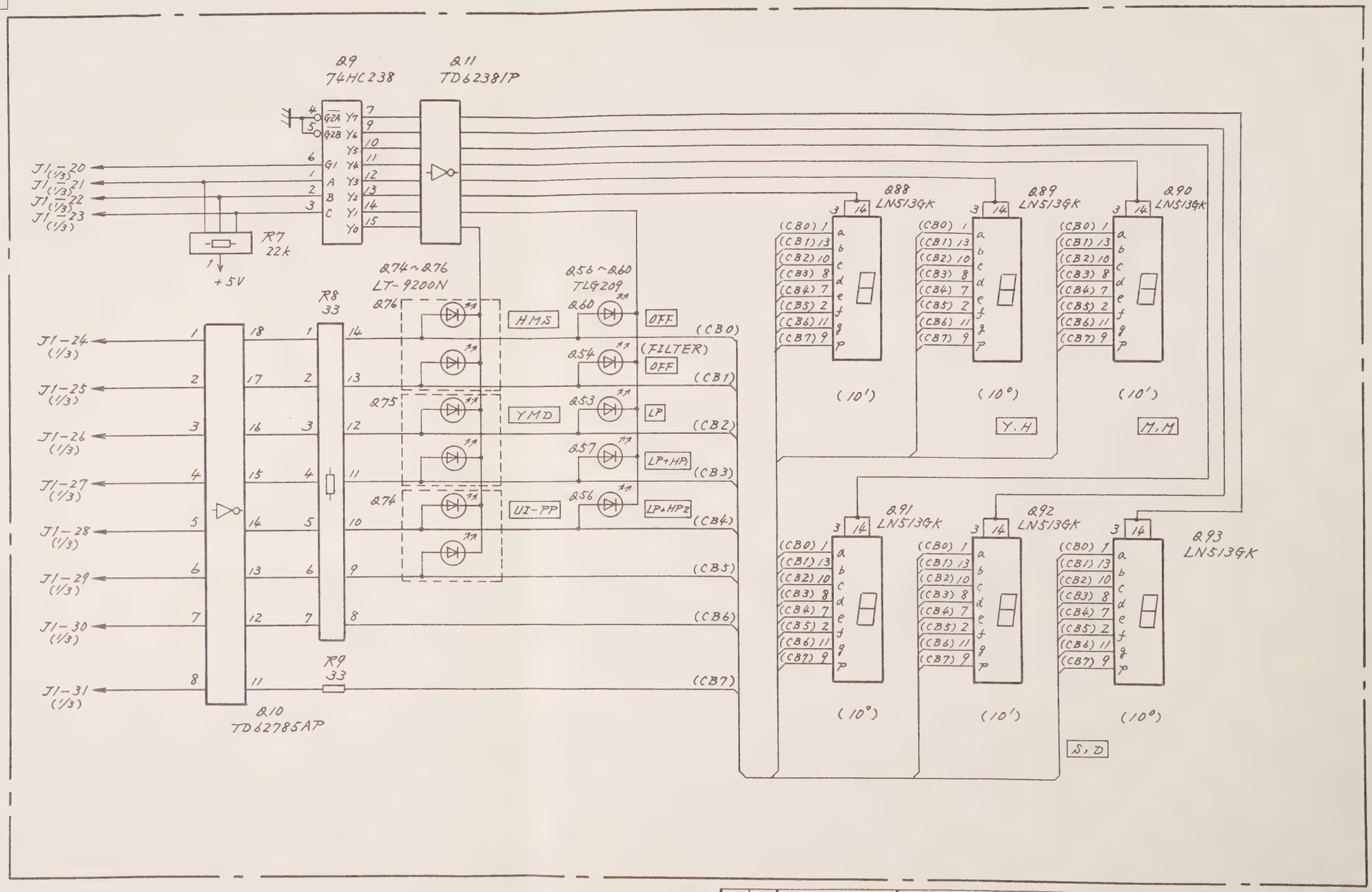

QTY	ITEM	PART No.	DESCRIPTION	MATERIAL	FINISH

CHECKED BY F. Sugata
APPROVED BY E. Sugimoto
TRACED BY
DRAWN BY T. Kubota
SCALE :

TITLE A3 R-DISPLAY Circuit Diagram. (Receiver)

DRAWING No. 43W36042 3/3

13

DEP

No. D023-1985.08

ANRITSU CORP.

3.6.5 JITTER MEASUREMENT PC board 14

(1) Circuit description

Figure 3-102 shows the block diagram of this circuit. The A5 JITTER MEASUREMENT circuit consists of a frequency division circuit, PD (phase-detection circuit), LPF circuit, VCXO circuit, filter circuit to limit the jitter frequency band, and jitter counting circuit.

This circuit has the same composition as the transmitter A4 JITTER MODULATION circuit.

The 1/N frequency division circuit divides the clock signal by when the jitter is 1 UIp-p or less, divides it by 12 when it is more than UIp-p at DS-3, and divides it by 10 at DS-1/1C/2.

The PD circuit detects the phase difference between the clock signal including the jitter and the reference clock signal.

The LPF circuit extracts the jitter signal.

The VCXO generates the reference clock signal.

The reference clock signal is generated by dividing the VCXO output signal by 12 for DS-1, by 6 for DS-1C, and by 4 for DS-2; It doubles it for DS-3.

Three filter circuits are available: an LP filter to limit the jitter frequency band; an LP filter + HP1 filter; and an LP filter + HP2 filter.

The counting circuit detects the amount of jitter and sends a pulse to display the jitter amount to the A2 T-CONTROL circuit. It also outputs the JITTER DEMOD signal.

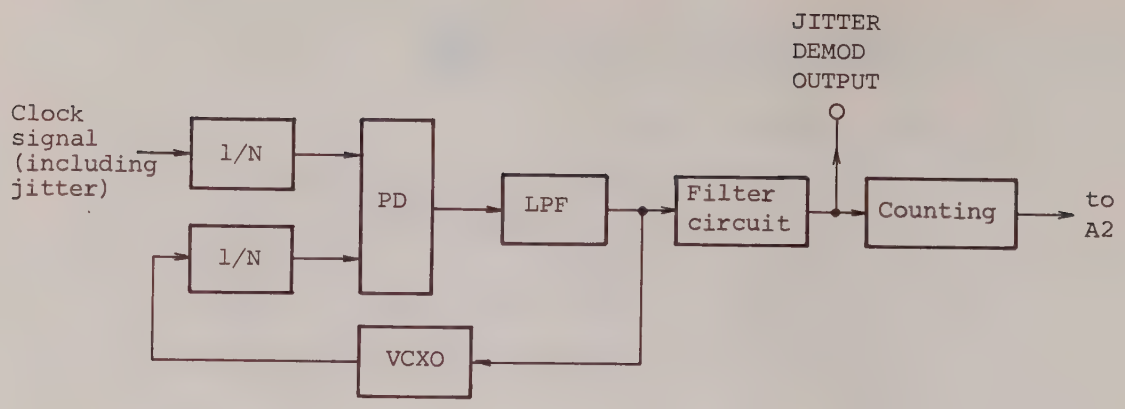

Fig. 3-102 A5 JITTER MEASUREMENT
Block Diagram

(2) Troubleshooting and adjustment

Transmitter panel setting

CLOCK	:	DS-3
JITTER MODULATION	:	MANUAL
FREQUENCY	:	500 Hz
AMPLITUDE	:	4 UIp-p

Receiver panel setting

INPUT	:	DSX-3
JITTER MEASUREMENT	:	OFF (FILTER)

Connection: Set-up as shown in Fig. 3-103.

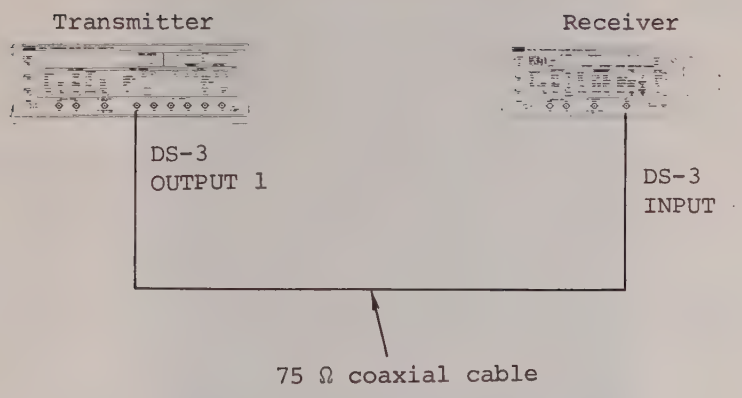

Fig. 3-103 Setup

[Step 1]

Check the waveform at ❶ using an oscilloscope probe.

The waveform shown in Fig. 3-104 is normal.

If it is normal, proceed to the next step.

If it is abnormal, troubleshoot the circuits related to J2-1 to ❶.

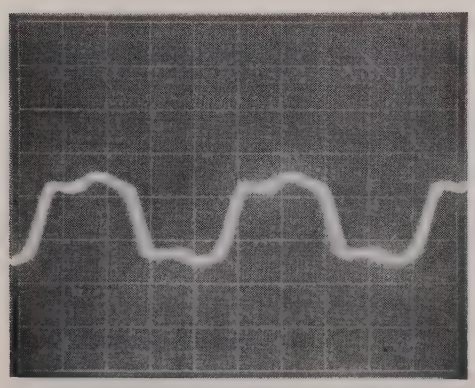

V: 0.5 V/div
H: 5 ns/div

Fig. 3-104 Waveform at ❶

[Step 2]

Check the waveforms at ❷ using an oscilloscope. probe.

The waveforms shown in Fig. 3-105 are normal.

If they are normal, proceed to the next step.

If they are abnormal, troubleshoot the circuits related to ❶ to ❷.

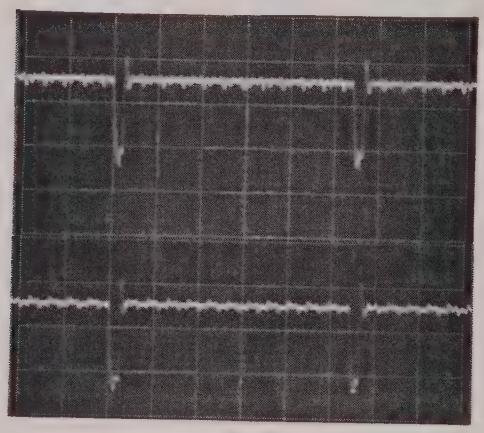

Fig. 3-105 Waveforms at ❷

[Step 3]

Check the waveform at ❸ and ❹ using an oscilloscope probe. The waveforms shown in Fig. 3-106 are normal. If they are normal, proceed to the next step. If they are abnormal, troubleshoot the circuits related to ❷ to ❸ and Q45.

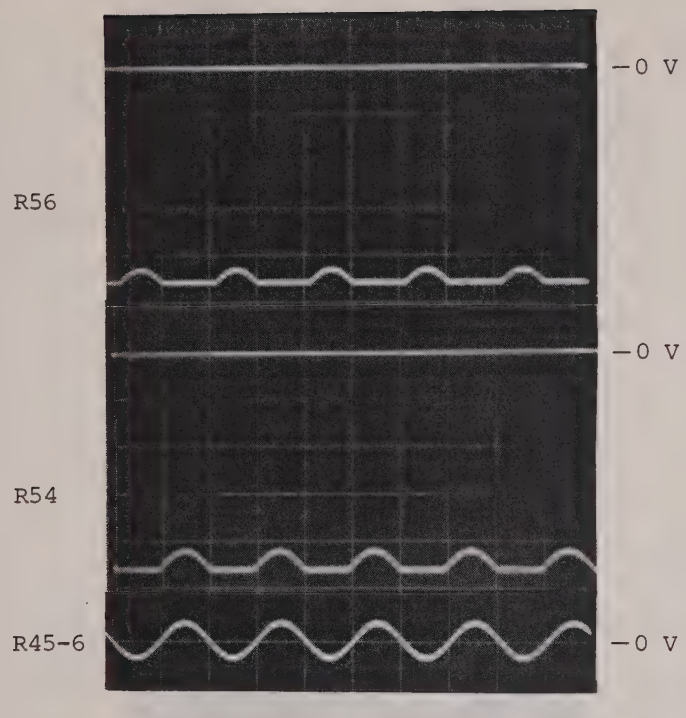

Fig. 3-106 Waveform at ❸ and ❹

[Step 4]

Check the waveform at ❺ using an oscilloscope.

The voltage shown in Fig. 3-107 is normal. If it is normal, proceed to the next step.

If it is abnormal, troubleshoot the circuits related to ❹ to ❺.

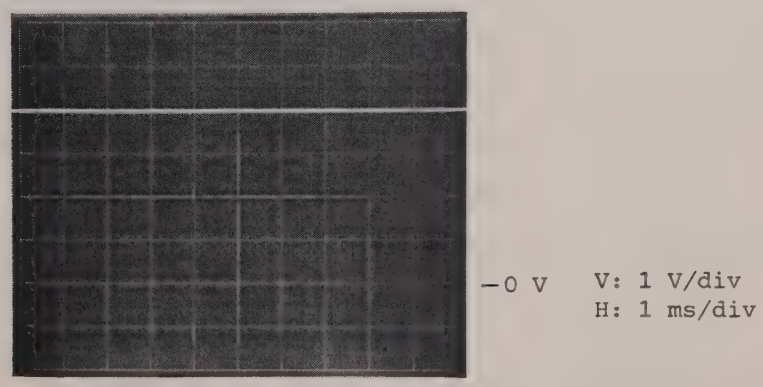

Fig. 3-107 Waveform at ❺

[Step 5]

Check the waveform at ❻ using an oscilloscope.

The waveform shown in Fig. 3-108 is normal.

If it is normal, proceed to the next step.

If it is abnormal, troubleshoot the circuits related to ❺ to ❻.

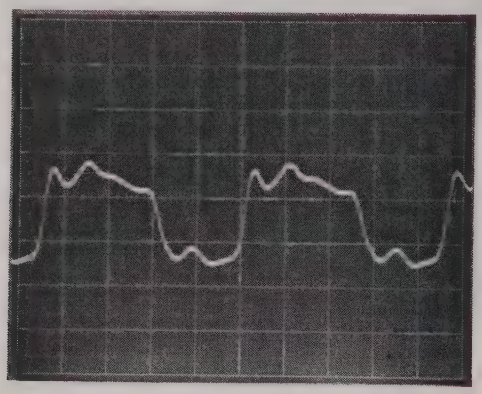

V: 0.5 V/div
H: 5 ns/div

Fig. 3-108 Waveform at ❻

[Step 6]

Check the waveform at ❼ using an oscilloscope.

The waveform shown in Fig. 3-109 is normal.

Also, check the frequency at ❼ using a frequency counter.

A frequency of 44,736 MHz is normal.

If it is normal, proceed to the next step.

If it is abnormal, troubleshoot the circuits related to ❻ to ❼.

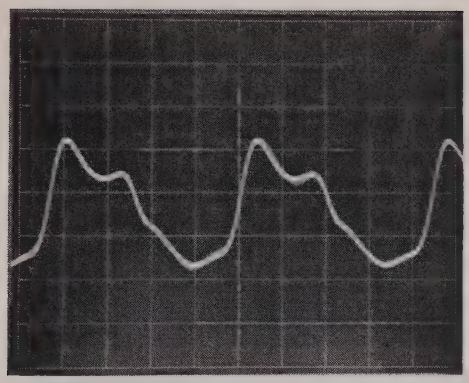

V: 0.5 V/div
H: 5 ns/div

Fig. 3-109 Waveform at ❼

[Step 7]

Check the waveform at ❽ using an oscilloscope.

The waveform shown in Fig. 3-110 is normal.

If it is normal, proceed to the next step.

If it is abnormal, troubleshoot the circuits related to ❹ to ❽.

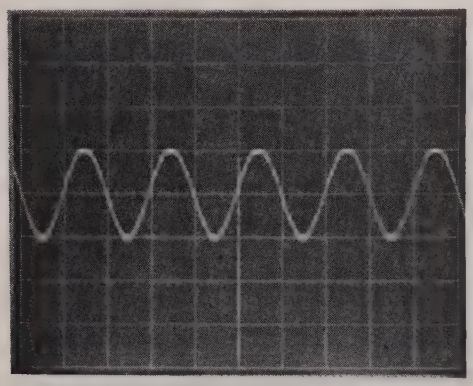

V: 0.5 V/div
H: 1 ms/div

Fig. 3-110 Waveform at ❽

[Step 8]

Check the waveform at ❾ using an oscilloscope.

The waveform shown in Fig. 3-111 is normal.

If it is normal, proceed to the next step.

If it is abnormal, troubleshoot the circuits related to ❾.

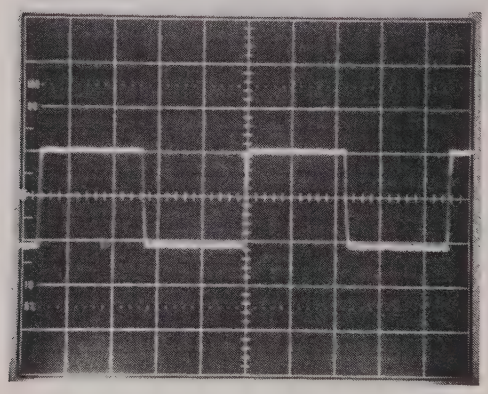

V: 0.5 V/div
H: 200 ms/div

Fig. 3-111 Waveform at ❾

[Step 9]

Check the waveform at ❿ using an oscilloscope.

The waveform shown in Fig. 3-112 is normal.

If it is normal, proceed to the next step.

If it is abnormal, troubleshoot the circuits related to ❽ to ❿.

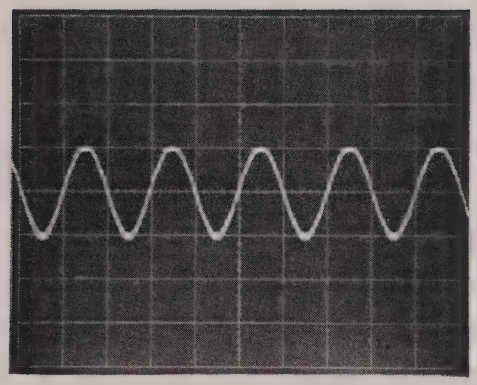

V: 0.5 V/div
H: 1 ms/div

Fig. 3-112 Waveform at ⑩

[Step 10]

Check the waveform at ⑪ using an oscilloscope.

The waveform shown in Fig. 3-113 is normal.

If it is normal, proceed to the next step.

If it is abnormal, troubleshoot the circuits related to Q31.

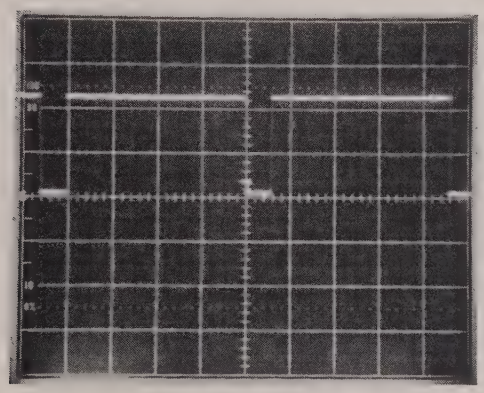

2 V/div
100 ms/div

Fig. 3-113 Waveform at ⑪

[Step 11]

Check the voltage at ⓬ using an oscilloscope.

The voltages shown in Table 3-14 are normal.

If they are normal, A5 is normal. If they are abnormal, troubleshoot the circuits related to J1 to ⓬.

Table 3-14 Voltage at ⓬

Test point	Voltage
Q12-19	L
Q12-20	L
Q12-21	L
Q12-22	H
Q12-23	H
Q12-24	L
Q12-25	L

H: +2 V to +5 V

L: 0.5 V or less

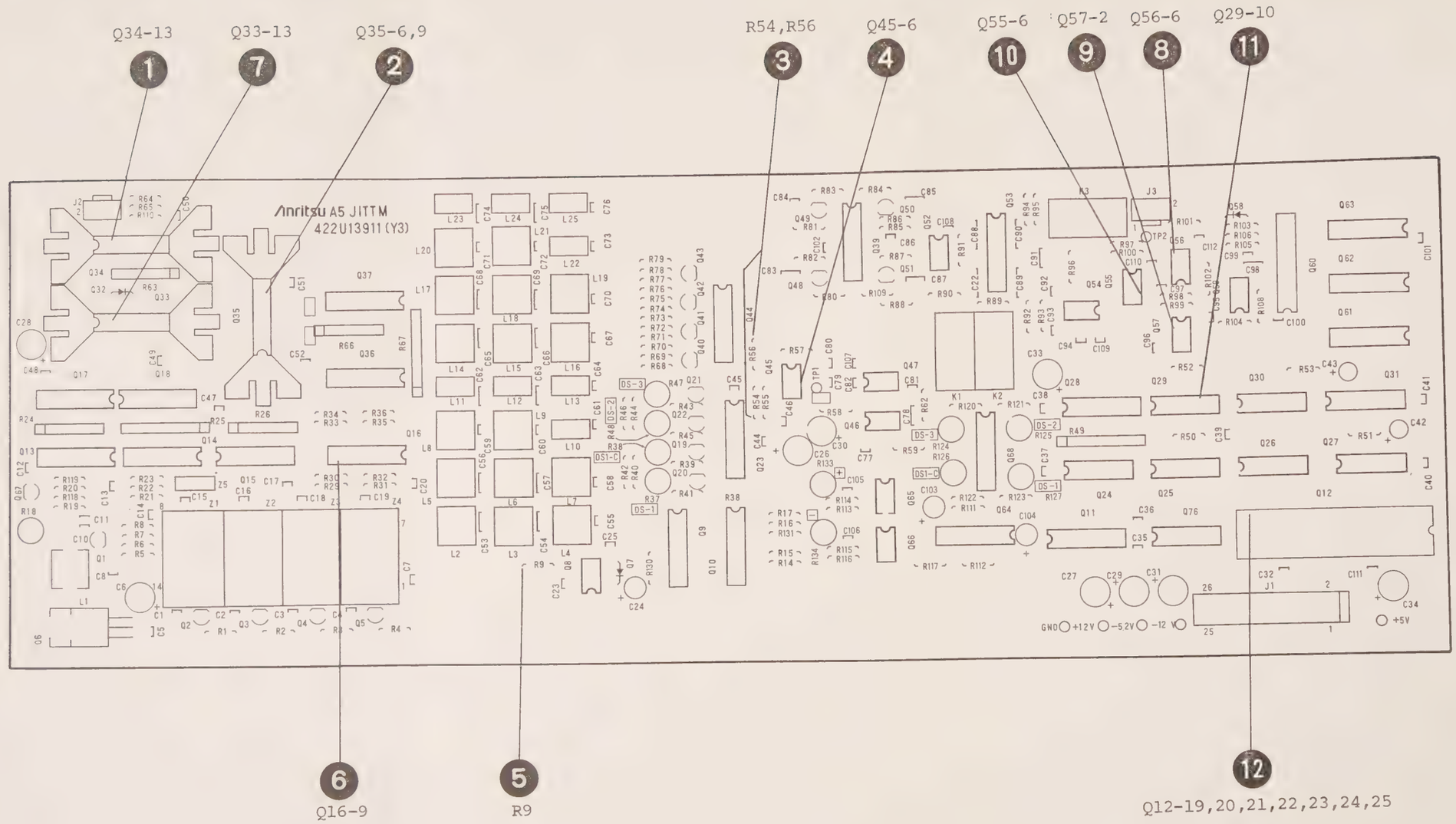

Fig. 3-114 JITTER MEASUREMENT PC Board **14**
Parts Layout

(3-199 blank)/3-200

APPLICATION

REVISIONS

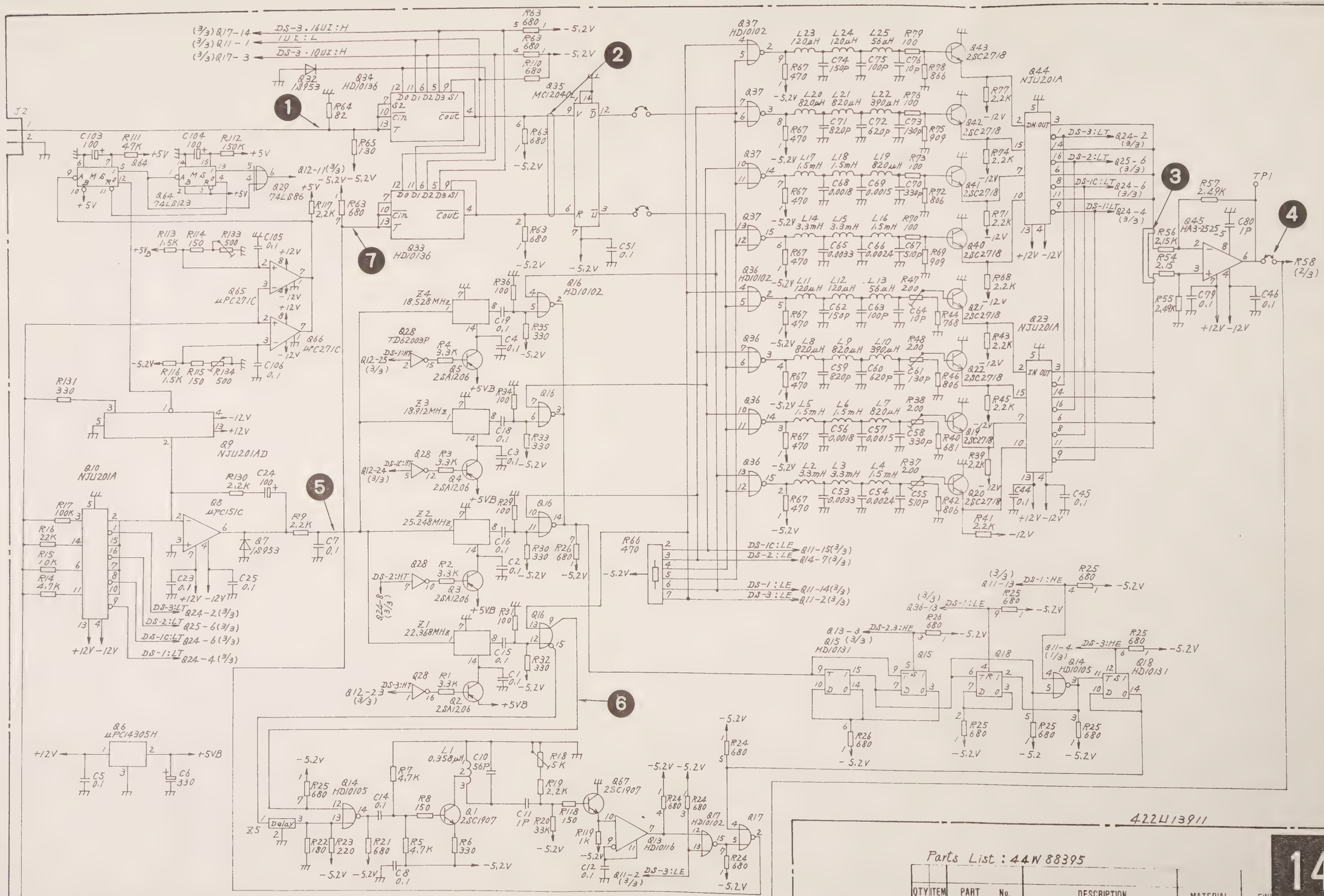

Parts List : 44W 88395

QTY	ITEM	PART No.	DESCRIPTION	MATERIAL	FIN

CHECKED BY F. Sugata
APPROVED BY E. Sugimoto
TRACED BY
DRAWN BY T. Kubota
SCALE

TITLE A5 JITTER MEASUREMENT
Circuit Diagram.(Receiver)(OPT02)

DRAWING No 43W36043 1/3

14

DEP

No 0021 1985 08

ANRITSU CORP. 3-201/3-202

43W36043 2/3

APPLICATION

REVISIONS

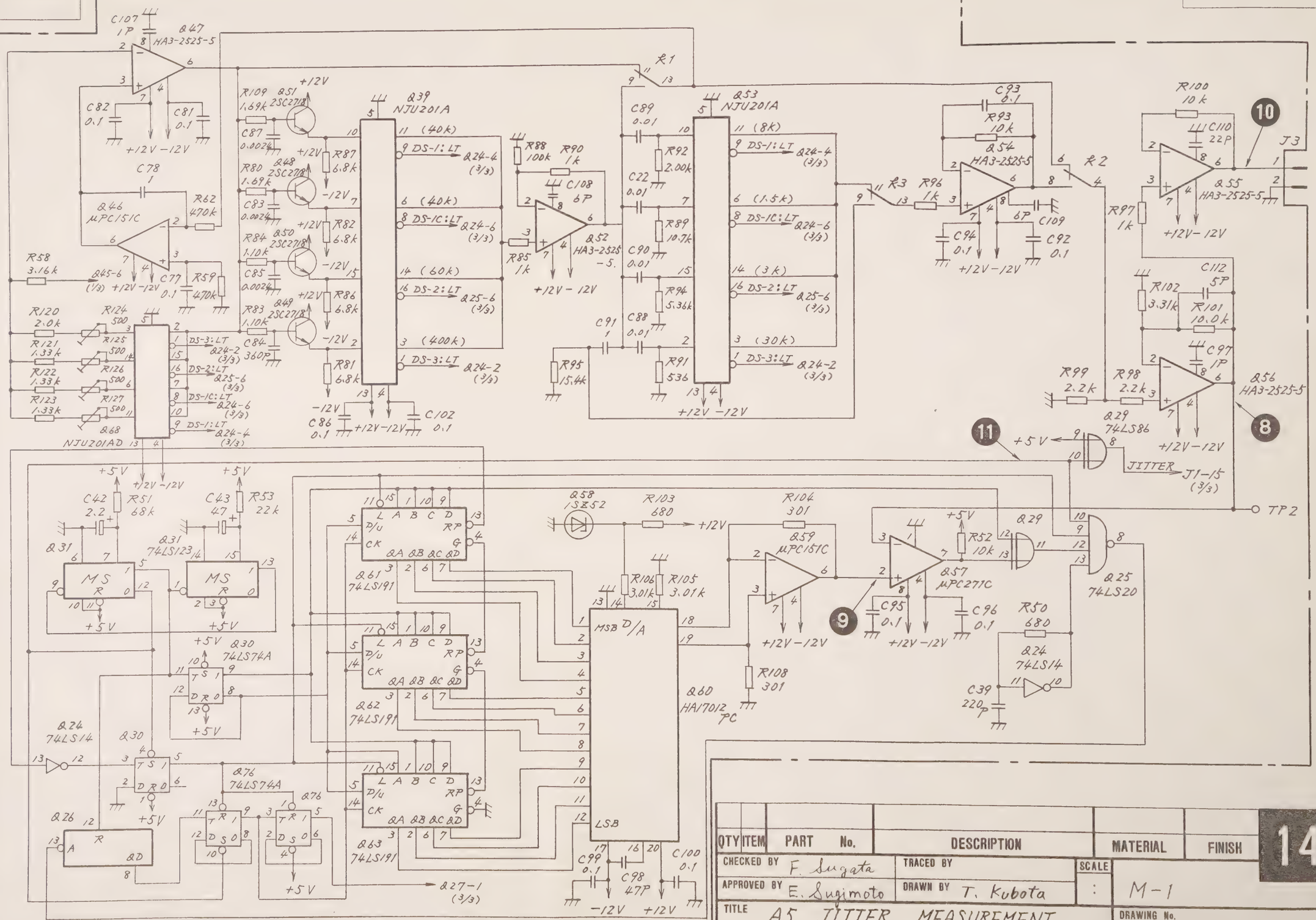

QTY	ITEM	PART No.	DESCRIPTION	MATERIAL	FINISH

CHECKED BY F. Sugata
APPROVED BY E. Sugimoto
TRACED BY
DRAWN BY T. Kubota
SCALE : M-1

TITLE A5 JITTER MEASUREMENT
Circuit Diagram (Receiver) (OPT 02)

DRAWING No. 43W36043 2/3

14

DEP

No. D023-1985.08

ANRITSU CORP.

3-203/3-204

43W36043 3/3

APPLICATION

REVISIONS

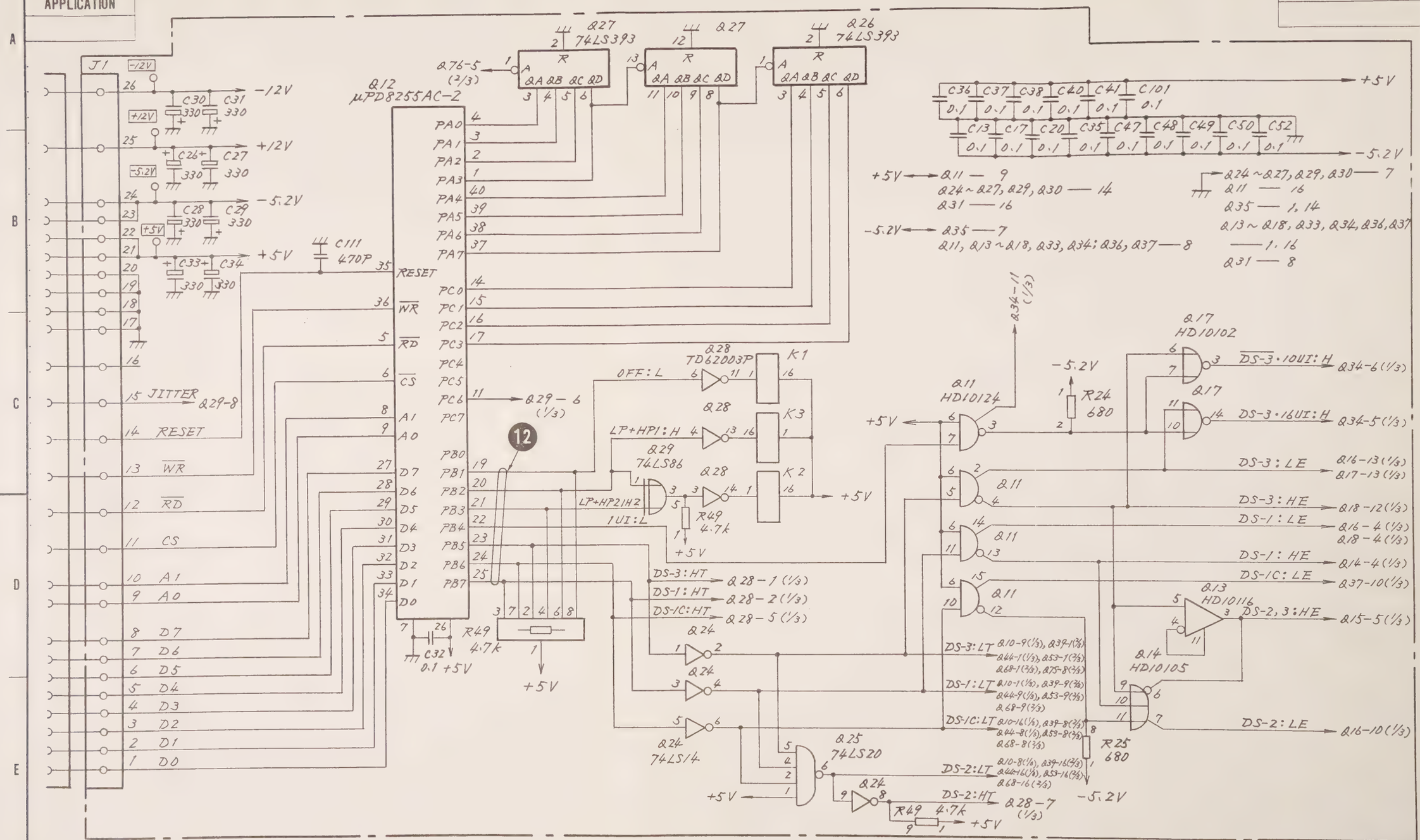

QTY	ITEM	PART No.	DESCRIPTION	MATERIAL	FINISH

CHECKED BY F. Sugata
APPROVED BY E. Sugimoto
TRACED BY
DRAWN BY T. Kubota
SCALE :

TITLE A5 JITTER MEASUREMENT
Circuit Diagram (Receiver) (OPT 02)

DRAWING No. 43W36043 3/3

14

DEP

No. D023-1985.08

ANRITSU CORP.

3-205/3-206

3.6.6 A4 R-SWITCH PC board **15**,

A8 PRINTER UNIT **16**, PRINTER INTERFACE **17**,

PRINTER CONTROL **18** and A9 DS-1 OUTPUT **19**

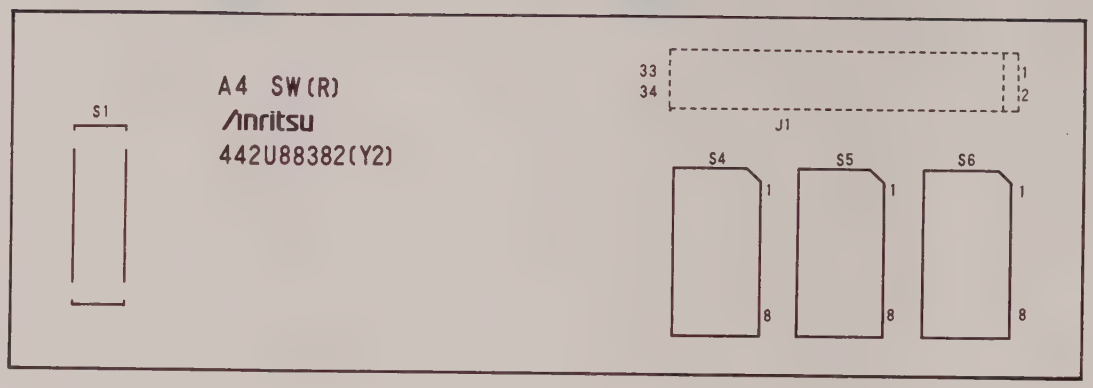

Fig. 3-115 R-SWITCH PC Board 15 Parts Layout

44W88393 1/1

APPLICATION	REVISIONS

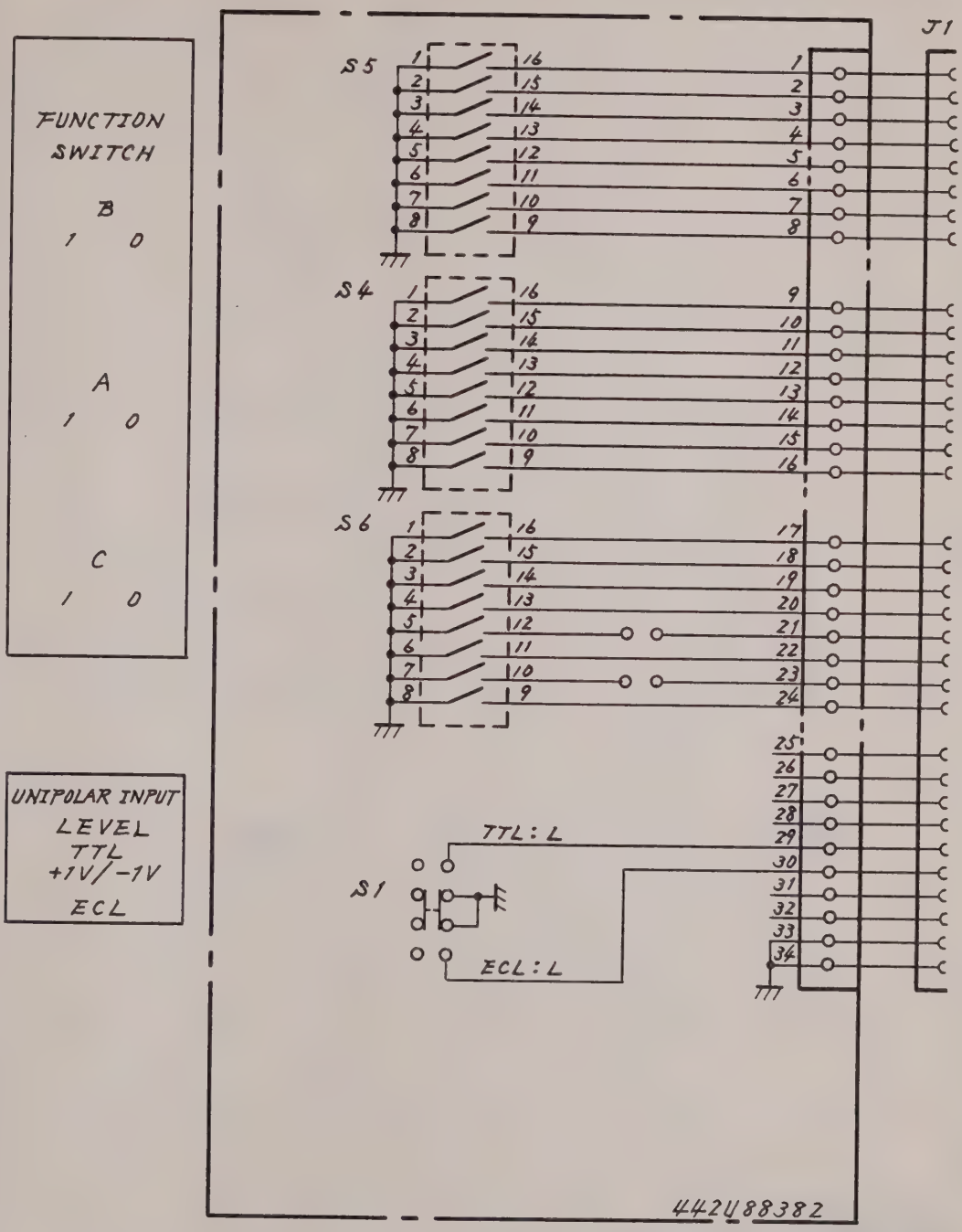

Parts List 44W88394

QTY	ITEM	PART No.	DESCRIPTION	MATERIAL	FINISH

15

CHECKED BY F. Sugata	TRACED BY	SCALE	
APPROVED BY E. Sugimoto	DRAWN BY T. Kubota	:	

DEP

TITLE A4 R-SWITCH Circuit Diagram (Receiver)

DRAWING No. 44W88393 1/1

No. D025-1985.08

ANRITSU CORP.

3-209/3-210

4

APPLICATION

REVISIONS

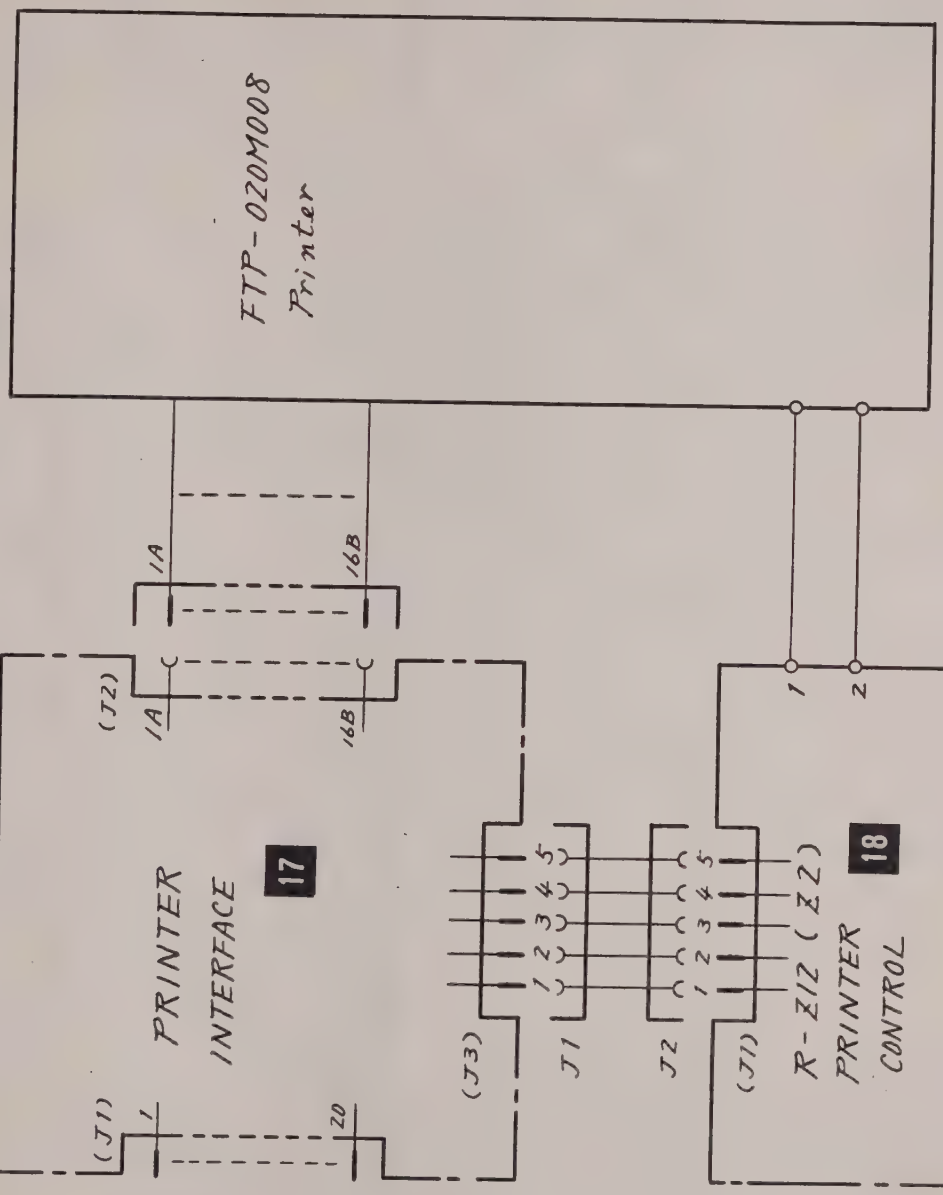

Parts List 44W85802

16

QTY	ITEM	PART No	DESCRIPTION	MATERIAL	FINISH	NOTE

CHECKED BY | TRACED BY | SCALE

APPROVED BY | DRAWN BY

DEP

TITLE A8 PRINTER UNIT

DRAWING No. 44W85803 1/1

No. 0025-1965.03

ANRITSU CORP.

3-211

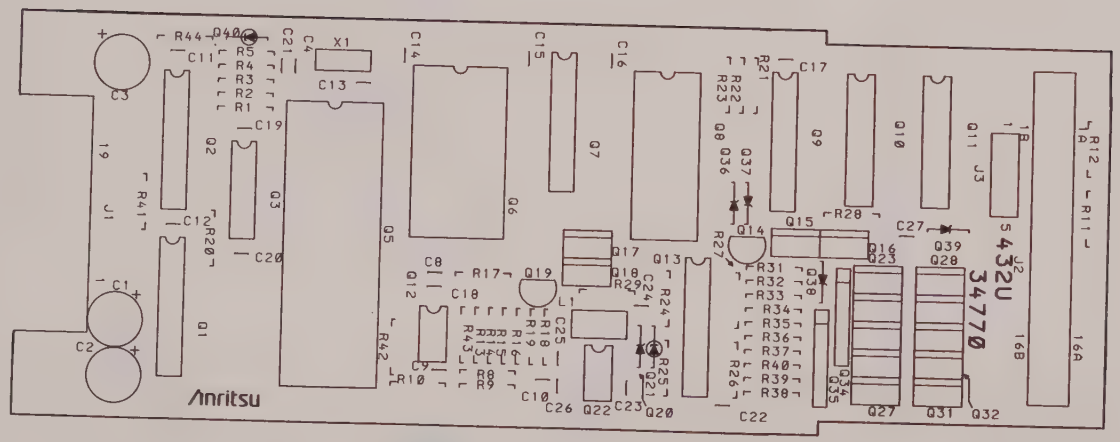

Fig. 3-116 Z1 in A8 PRINTER INTERFACE PC Board Parts Layout

17

43W34762 1/1

APPLICATION

REVISIONS

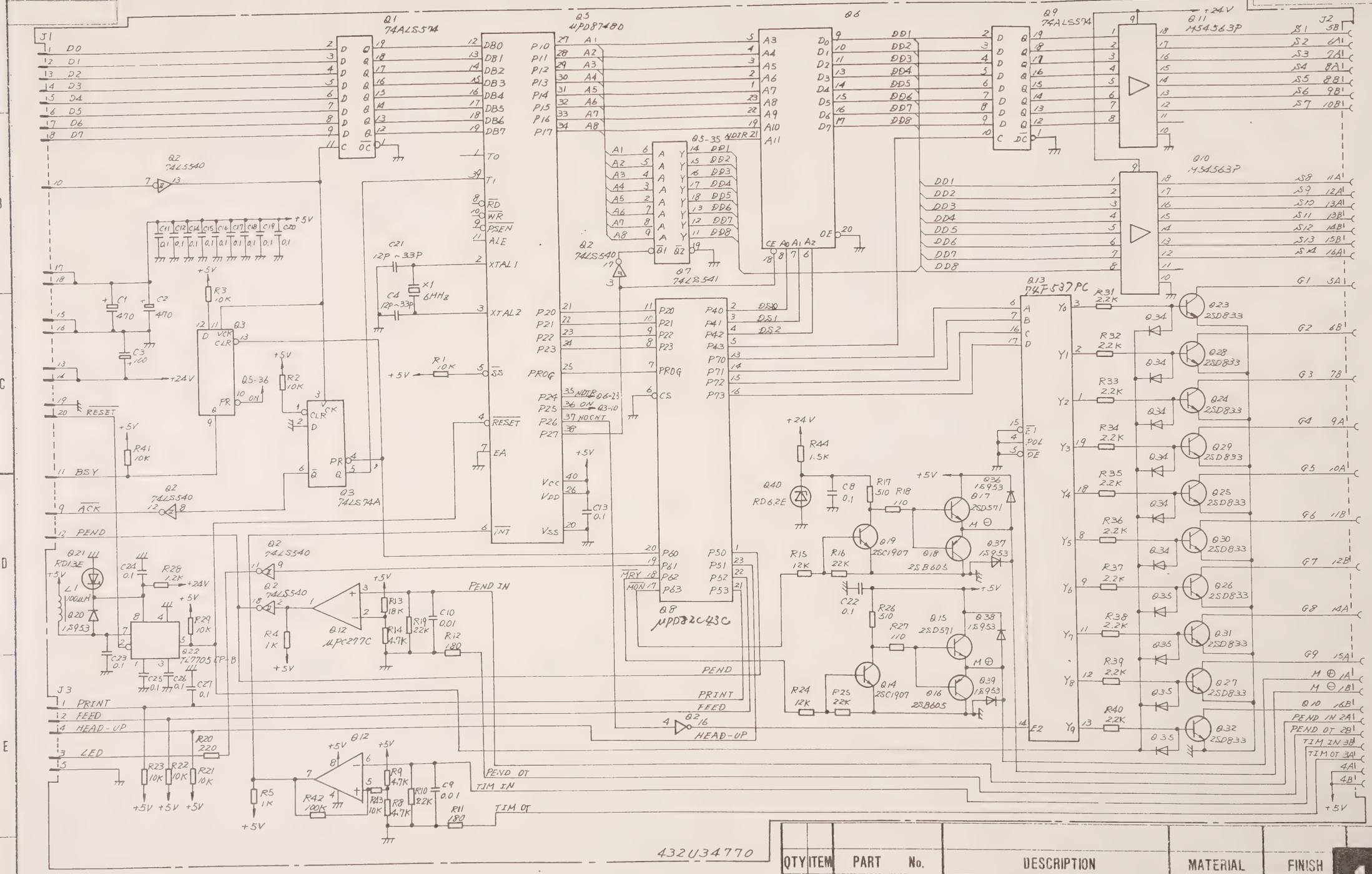

QTY	ITEM	PART No.	DESCRIPTION	MATERIAL	FINISH

Parts List 44W85804

CHECKED BY | TRACED BY | SCALE

APPROVED BY | DRAWN BY | M-1

TITLE: Z1 in A8 PRINTER INTERFACE Circuit Diagram

DRAWING No. 43W34762 1/1

17

DEP

No. 0023-1985.08

ANRITSU CORP.

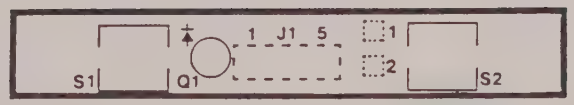

Fig. 3-117 Z2 in A8 PRINTER CONTROL PC Board Parts Layout

18

44W85806 1/1

APPLICATION

REVISIONS

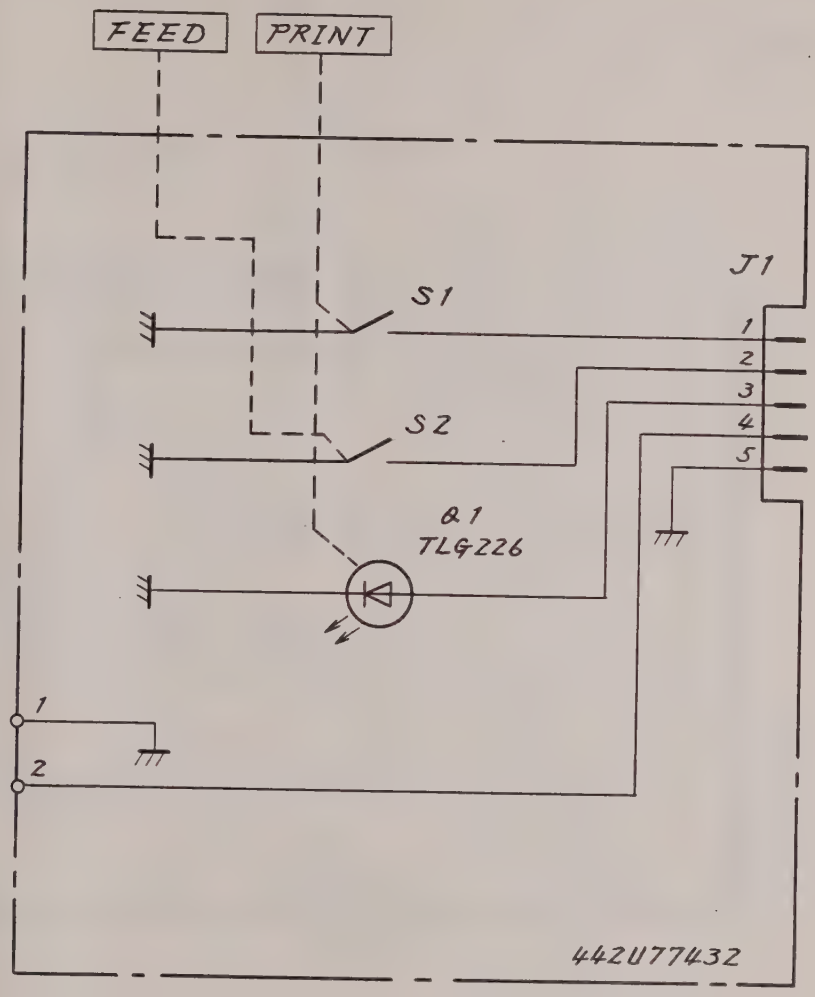

Parts List 44W85805

QTY	ITEM	PART No.	DESCRIPTION	MATERIAL	FINISH

18

CHECKED BY | TRACED BY | SCALE

APPROVED BY | DRAWN BY

DEP

TITLE ZZ in A8 PRINTER CONTROL

DRAWING No. 44W85806 1/1

No. D025-1985.08

ANRITSU CORP.

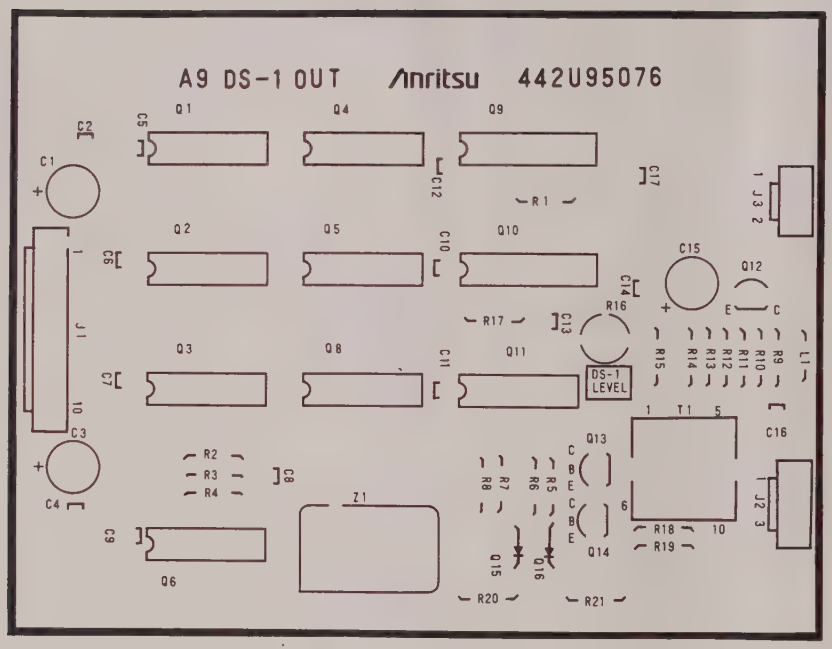

Fig. 3-118 A9 DS-1 OUTPUT PC Board Parts Layout

43 W39923 1/1

APPLICATION

REVISIONS

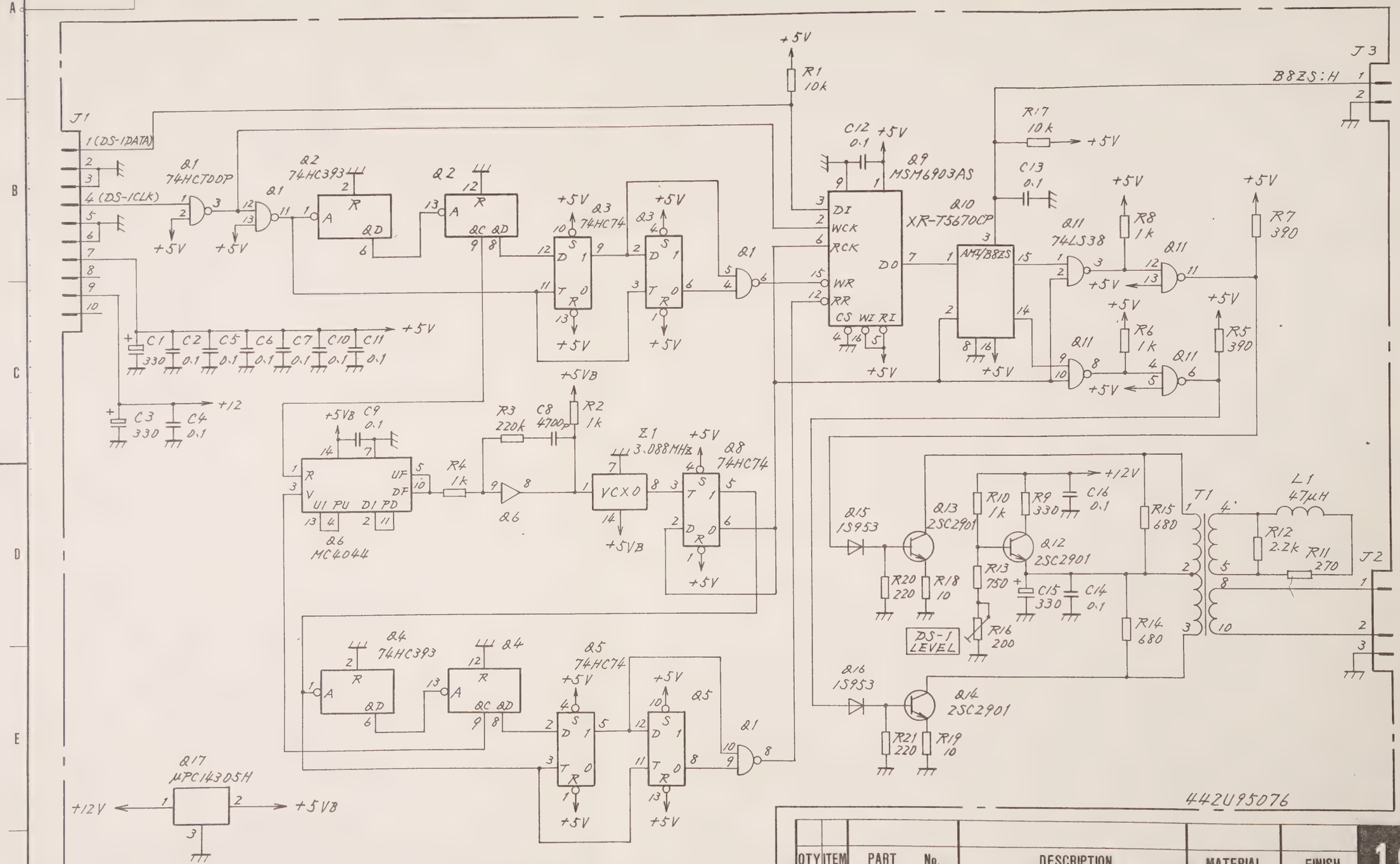

QTY	ITEM	PART No.	DESCRIPTION	MATERIAL	FINISH

CHECKED BY | DRAWN BY | SCALE

APPROVED BY | DESIGNED BY | :

TITLE A9 DS-1 OUTPUT Circuit Diagram (Receiver) (OPT 03)

DRAWING No. 43 W39923 1/1

Parts List 44W95156

DEP

19

No. D023-1988.05

ANRITSU CORP.

3-217/3-218

SECTION 4

REPLACEABLE PARTS

4.1 Introduction

This section describes how to order replacement parts or components. The following tables (Table 4-2 and 4-3) show circuit references (CKT REF) and abbreviations used for items in the Parts Lists. The quantity of each item in the Parts Lists. The quantity of each item in the Parts List is "one" unless another value is given in the "NOTE" column.

4.2 Ordering information

When ordering parts, please supply the following description from the PARTS LIST.

Table 4-1 Ordering Information

No.	Item	Example
1	Instrument name	ME3401A Transmitter, Digital Transmission Analyzer
2	Parts location	Parts of Z1 POWER SUPPLY
3	CKT REF	R1
4	Parts name	ARD25T 100J Note: The part name is given in parentheses ( ) in the Parts List. Parts with asterisk* require factory adjustment upon repair. When ordering part(s) marked with an asteirsk, give full description of the part(s).
5	Quantity	1
6	Instrument serial No.	M31257

4.3 Circuit References and Abbreviations used in the Parts List

(1) Circuit references

Table 4-2

A:	PC board	G:	Fan	M:	Meter, timer	S:	Switch
B:	Speaker	J:	Jack, plug, connector	P:	Lamp	T:	Transformer
C:	Capacitor	K:	Relay	Q:	Transistor, diode, IC, rectifier	W:	Cable
E:	Terminal	K:	Coil microinductor	R:	Resistor	X:	Crystal OSC
F:	Fuse					Z:	Miscellaneous

(2) Abbreviations

Table 4-3

A:	amperes	Multi:	multiplying
Att, R var:	variable attenuator using film elements	N-ch:	N-channel
BL:	boundary layer	non-lin:	non-linear taper
Cer:	ceramic	Non-pol:	non polarity
CF:	carbon film	NPN:	negative-positive-negative
Comp:	composition	Ω:	ohms
CRT:	cathode-ray tube	p:	pico (x 10^{-12})
Di:	diode	Plast:	plastic film
DIP:	dual in-line package	PMTR:	potentiometer
Elect:	electrolytic aluminum	PNP:	positive-negative-positive
F:	farad	p-p:	peak-to-peak value
FET:	field-effect transistor	RFC:	RF choke
G:	ground	R-lamp:	resistor lamp
Ge:	germanium	rms:	effective value (root-mean-square)
H:	henry	SBD:	Schottky barrier diode
Hz:	hertz	SCR:	silicon-controlled rectifier
IC:	integrated circuit	Si:	silicon
IEC:	Conforms to IEC Safety Standards	SRD:	step-recovery diode
J-FET:	junction FET	Tant:	tantalum
k:	kilo (x 10^{3})	TM:	time-lag
LED:	light-emitting diode	Tr:	transistor
M:	mega (x 10^{6})	Trans:	transformer
m:	milli (x 10^{-3})	μ:	micro (x 10^{-6})
MF:	metallized film	V:	volt
MOS-FET:	metal-oxide semiconductor FET	Var:	variable
M paper:	metallized paper	WW:	wire-wound
M plast:	metallized plastic film	XTAL:	crystal

4.4 Reading Capacitance and Resistance

(1) Reading resistance

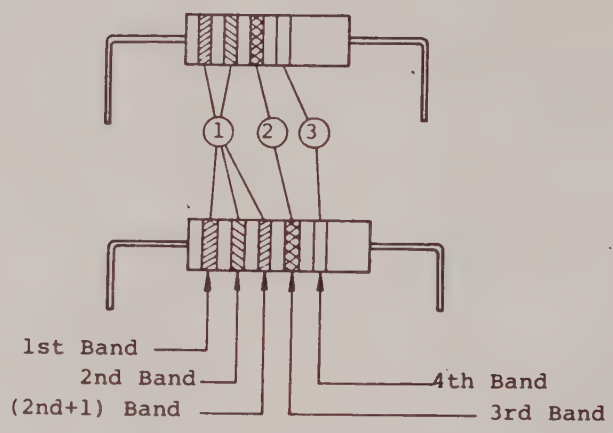

COLOR	① Figure 1st	① Figure 2nd	② Multiplier 3rd	③ Tolerance 4th
Black	0	0	$x10^0$	-
Brown	1	1	$x10^1$	-
Red	2	2	$x10^2$	-
Orange	3	3	$x10^3$	-
Yellow	4	4	$x10^4$	-
Green	5	5	$x10^5$	±0.5%
Blue	6	6	$x10^6$	-
Purple	7	7	$x10^7$	-
Gray	8	8	$x10^8$	-
White	9	9	$x10^9$	-
Gold	-	-	$x10^{-1}$	±5%
Silver	-	-	$x10^{-2}$	±10%
-----	-	-		±20%

For Examples:

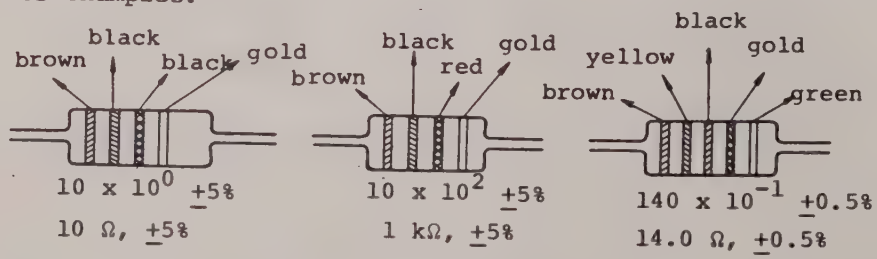

(3) Reading capacitance

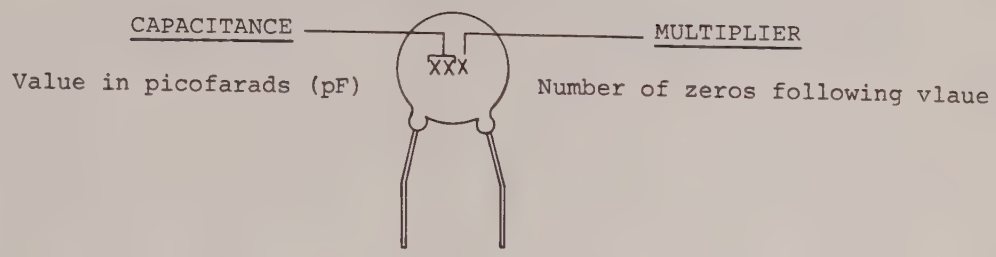

Examples: 103 = 100,000 pF = 10^{-8} or 0.01 μF

302 = 3,000 pF = 3×10^{-9}F or 0.003 μF

676 = 67,000,000 pF = 67×10^{-6}F or 67 μF

(a) Ceramic capacitors, polyester capacitors

Marking	0.5	1	10	101	102	103	104
Capacity	0.5 pF	1 pF	10 pF	100 pF	1000 pF	0.01 μF	0.1 μF

Examples:

Ceramic Capacitors

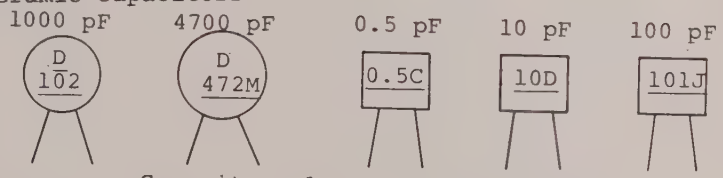

Capacity values are always underlined.

Polyester Capacitors

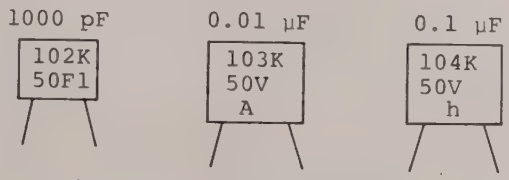

(b) Tantalum capacitors, Metallized capacitors and Electrolytic capacitors

Marking	OR47	010	100	101
Capacitor	0.47 μF	1 μF	10 μF	100 μF

4.5 Parts List

Note:

See Table 3-4 and Table 3-5 for a list of the circuit diagram names/numbers, Z numbers, PC board numbers, and parts list numbers.

Parts List: DIGITAL TRANSMISSION ANALYZER ME3401A TRANSMITTER **1**

CKT REF	DESCRIPTION	RATING	NOTE
A 1	PATTERN GENERATOR (422U13832)		44W88385
A 2	T-CONTROL(422U13834)		44W88386
A 3	T-DISPLAY(422U13836)		44W88387
A 4	JITTER MODULATION (422U13913)		44W88388 OPT01
A 5	MODULATION SIGNAL GENERATOR(432U36046)		44W88408 OPT01
A 6	T-SWITCH(442U91223)		44W90993
A 7	GP-IB(442U83054)		44W83046 OPT41
A 8	RS-232C(442U83056)		44W83047 OPT43
E 1	Terminal,(44E87532)		
E 2	Terminal,(ML-9DE(2P))		
G 1	Fan,(FBK-08A12LZ)		
J 1	Jack,(DF1-15S2.5R24)		
J 2	Jack,(DF1-2S2.5R24)		
J 3	Jack,(DF1-2S2.5R24)		
J 4	Not assigned		
J 5	Jack,(U-SA1003)		
J 6	Jack,(DF1-15S2.5R24)		
J 7	Jack,(DF1-2S2.5R24)		
J 8	Not assigned		
J 9	Not assigned		
J 10	Not assigned		
J 11	Receptacle, (BNC-R-101-NI)		
J 12	Receptacle, (BNC-R-101-NI)		
J 13	Receptacle, (BNC-R-101-NI)		
J 14	Receptacle, (BNC-R-101-NI)		
J 15	Receptacle, (BNC-R-101-NI)		
J 16	Receptacle, (BNC-R-101-NI)		
J 17	Receptacle, (BNC-R-101-NI)		

( ): Manufacturer s part number
* : Selected at factory

M-1
44W88384 1/2

Parts List: DIGITAL TRANSMISSION ANALYZER ME3401A TRANSMITTER **1**

CKT REF	DESCRIPTION	RATING	NOTE
J 18	Receptacle, (BNC-R-101-NI)		
J 19	Inlet,(NC-165)		
J 20	Jack,(DF1-8S2.5R24)		
J 21	Jack,(DF1-2S2.5R24)		
J 22	Jack,(DF1-2S2.5R24)		
J 23	Jack,(DF1-2S2.5R24)		
J 24	Jack,(DF1-2S2.5R24)		
J 25	Jack,(DF1-2S2.5R24)		
J 26	Jack,(DF1-2S2.5R24)		
S 1	Switch,(SDDUA3105A)		
S 2	Switch,(8E3011)		
T 1	Power,(44T88342)	90VA	
W 1	Cable, (HIF3BA5B-34DAA26S)		
Z 1	Line filter, (MBW-1202-33)		

( ): Manufacturer's part number
* : Selected at factory

44W88384 2 2

Parts List: A2 T-CONTROL (TRANSMITTER) **2**

CKT REF	DESCRIPTION	RATING	NOTE
C 1	Elect,(SME80LISN-1000050D)	10000μF,±20%,80V	
C 2	Elect,(CE04C1J100A)	10μF,±20%,63V	
C 3	Elect,(CE04C1V221A)	220μF,±20%,35V	
C 4	Elect,(CE04C1E470A)	47μF,±20%,25V	
C 5	Elect,(CE04C1V221A)	220μF,±20%,35V	
C 6	Elect,(SXE35VB-680 ø12.5 x 25)	680μF,±20%,35V	
C 7	Elect,(SXE25VB-1000 ø12.5 x 25)	1000μF,±20%,25V	
C 8	Elect,(SXE25VB-1000 ø12.5 x 25)	1000μF,±20%,25V	
C 9	Elect,(SXE16VB-1500 ø12.5 x 25)	1500μF,±20%,16V	
C 10	Elect,(SXE16VB-1500 ø12.5 x 25)	1500μF,±20%,16V	
C 11	Elect,(SXE16VB-1500 ø12.5 x 25)	1500μF,±20%,16V	
C 12	Not assigned		
C 13	Not assigned		
C 14	Elect,(CE04C1E221A)	220μF,±20%,25V	
C 15	Not assigned		
C 16	Plast,(ECQ-P1102FZ)	1000pF,±1%,100V	
C 17	Cer,(CC924CH1H102J)	1000pF,±5%,50V	
C 18	Cer,(CK924F1H104Z)	0.1μF,+80/-20%,50V	
C 19	Cer,(CK924F1H104Z)	0.1μF,+80/-20%,50V	
C 20	Cer,(CK924F1H104Z)	0.1μF,+80/-20%,50V	
C 21	Cer,(CK924F1H104Z)	0.1μF,+80/-20%,50V	
C 22	Cer,(CK924F1H104Z)	0.1μF,+80/-20%,50V	
C 23	Cer,(CK924F1H104Z)	0.1μF,+80/-20%,50V	
C 24	Not assigned		
C 25	Cer,(CK924F1H104Z)	0.1μF,+80/-20%,50V	
C 26	Cer,(CK924F1H104Z)	0.1μF,+80/-20%,50V	
C 27	Not assigned		
C 28	Not assigned		
C 29	Not assigned		
C 30	Elect,(CE04C1H2R2A)	2.2μF,±20%,50V	
C 31	Elect,(CE04C1H2R2A)	2.2μF,±20%,50V	
C 32	Elect,(CE04C1A102A)	1000μF,±20%,10V	
C 33	Elect,(CE04C1A101A)	100μF,±20%,10V	
C 34	Elect,(CE04C1E470A)	47μF,±20%,25V	
C 35	Elect,(CE04C1E470A)	47μF,±20%,25V	
C 36	Elect,(CE04C1A221A)	220μF,±20%,10V	
C 37	Elect,(CE04C1A221A)	220μF,±20%,10V	
C 38	Not assigned		
C 39	Not assigned		
C 40	Not assigned		

( ): Manufacturer's part number
* : Selected at factory

44W88386 1 5

Parts List: A2 T-CONTROL (TRANSMITTER) **2**

CKT REF	DESCRIPTION	RATING	NOTE
C 41	Not assigned		
C 42	Not assigned		
C 43 to C 54	Cer,(CK924F1H104Z)	0.1μF,+80/-20%,50V	
C 55	Elect,(CE04C1C331A)	330μF,±20%,16V	
C 56	Elect,(CE04C1C331A)	330μF,±20%,16V	
C 57	Cer,(CC924CH1H102J)	1000pF,±5%,50V	
C 58	Elect,(CE04C1J470A)	47μF,±20%,63V	
F 1	Fuse,(MF51NN250V5ADC01)	5A,250V	
F 2	Fuse, (MF51NN250V0.5ADC01)	0.5A,250V	
F 3	Fuse,(MF51NN250V1ADC01)	1A,250V	
F 4	Fuse,(MF51NN250V5ADC01)	5A,250V	
F 5	Fuse,(MF51NN250V2ADC01)	2A,250V	
J 1	Plug,(DF1-15P2.5DSA)	15pins	
J 2	Plug,(DF1-2P2.5DSA)	2pins	
J 3	Plug,(DF1-2P2.5DSA)	2pins	
J 4	Cable,(CNF23-16D-AA20S)		
J 5	Cable,(CNF23-20D-AA10S)		
J 6	Plug,(CNF3-34P-2.54DSA)	34pins	
J 7	Plug,(CNF3-34P-2.54DSA)	34pins	
J 8	Plug,(DF1-2P-2.5DSA)	2pins	
K 1	Relay,(OHD3-90M)		
L 1	Coil,(SK-17C-045-650)	650μH	
L 2	Coil,(SK-17C-045-650)	650μH	
L 3	Coil,(SK-21C-060-550)	550μH	
L 4	Coil,(SK-24S-110-100)	100μH	
L 5	Coil,(SK-24S-110-100)	100μH	
L 6	Coil,(SK-21C-080-140)	140μH	
M 1	Not assigned		
Q 1	IC,(μPC494C)		
Q 2	IC,(μPC1251C)		
Q 3	IC,(μPC393C)		

( ): Manufacturer's part number
* : Selected at factory

M-2
44W88386 2 5

Parts List: A2 T-CONTROL (TRANSMITTER) **2**

CKT REF	DESCRIPTION	RATING	NOTE
Q 4	Tr,(2SC1826)		
Q 5	Tr,(2SA1154)		
Q 6	Tr,(2SC3220)		
Q 7	Tr,(2SC3220)		
Q 8	Photo coupler,(PC618)		
Q 9	Photo coupler,(PC817)		
Q 10	Not assigned		
Q 11	Rectifier, (D5FB20(4002))		
Q 12	Rectifier,(RB-152-LFB)		
Q 13	Rectifier,(V03G)		
Q 14	Rectifier,(V19E-1)		
Q 15	Rectifier,(V19E-1)		
Q 16	Rectifier,(V19E-1)		
Q 17	Rectifier,(V19E-1)		
Q 18	Rectifier,(V19E-1)		
Q 19	Rectifier,(V19E-1)		
Q 20	Rectifier,(D5LCA20)		
Q 21	Rectifier,(D8LCA20)		
Q 22	Rectifier,(D8LCA20R)		
Q 23	Rectifier,(D10SC4M)		
Q 24	Rectifier,(D10SC4MR)		
Q 25	Not assigned		
Q 26	Not assigned		
Q 27	Not assigned		
Q 28	Di,breakdown,(RD5.1E)	4.8 to 5.37V,500mW	
Q 29	Di,breakdown,(RD13E)	12.11 to 13.66V,500mW	
Q 30	Di,breakdown,(RD2.7E)	2.5 to 2.93V,500mW	
Q 31	Di,breakdown,(RD2.7E)	2.5 to 2.93V,500mW	
Q 32	Di,(1S955)		
Q 33	Di,(1S955)		
Q 34	Di,(1S953)		
Q 35	Not assigned		
Q 36	Not assigned		
Q 37	Not assigned		
Q 38	Not assigned		
Q 39	Not assigned		
Q 40	Di,(1S953)		
Q 41	Di,(1S953)		
Q 42	Not assigned		
Q 43	Not assigned		
Q 44	Not assigned		
Q 45	IC,(74LS244)		
Q 46	IC,(74LS245)		
Q 47	IC,(74LS14)		
Q 48	IC,(74LS139)		
Q 49	IC,(74LS74A)		

( ): Manufacturer's part number
* : Selected at factory

44W88386 3/5

Parts List: A2 T-CONTROL (TRANSMITTER) **2**

CKT REF	DESCRIPTION	RATING	NOTE
Q 50	IC,(74LS32)		
Q 51	IC,(74LS123)		
Q 52	IC,(74LS04)		
Q 53	IC,(74LS155)		
Q 54	IC,(MB3771(DIP))		
Q 55	IC,(TC74HC00P)		
Q 56	IC,(EPROM32KX8-20C)		
Q 57	IC,(HM6264ALP-15)		
Q 58	IC,(μPD8259AC-2)		
Q 59	IC,(LH0080B)		DILB40P-8J
Q 60	IC,(7437)		
Q 61	IC,(74LS74A)		
Q 62	IC,(74LS245)		
Q 63	IC,(μPD8255AC-2)		
Q 64	IC,(74LS245)		
Q 65	IC,(74LS244)		
Q 66	IC,(μPC14312H)		
Q 67	IC,(μPC16312H)		
R 1	MF,(RS1FB4.7KΩJ)	4.7kΩ,±5%,1W	
R 2	MF,(RS1FB3.3KΩJ)	3.3kΩ,±5%,1W	
R 3	MF,(RS1FB3.3KΩJ)	3.3kΩ,±5%,1W	
R 4	MF,(RN14K2H101J)	100Ω,±5%,1/2W	
R 5	CF,(ARD25T123J)	12kΩ,±5%,1/4W	
R 6	CF,(ARD25T331J)	330Ω,±5%,1/4W	
R 7	CF,(ARD25T332J)	3.3kΩ,±5%,1/4W	
R 8	CF,(ARD25T681J)	680Ω,±5%,1/4W	
R 9	CF,(ARD25T102J)	1kΩ,±5%,1/4W	
R 10	CF,(RN14K2H470J)	47Ω,±5%,1/2W	
R 11	MF,(RN14K2H100J)	10Ω,±5%,1/2W	
R 12	CF,(ARD25T101J)	100Ω,±5%,1/4W	
R 13	MF,(RN14K2H470J)	47Ω,±5%,1/2W	
R 14	MF,(RN14K2H100J)	10Ω,±5%,1/2W	
R 15	CF,(ARD25T101J)	100Ω,±5%,1/4W	
R 16	MF,(RS2FB220ΩJ)	220Ω,±5%,2W	
R 17	CF,(ARD25T122J)	1.2kΩ,±5%,1/4W	
R 18	CF,(ARD25T621J)	620Ω,±5%,1/4W	
R 19	CF,(ARD25T471J)	470Ω,±5%,1/4W	
R 20	CF,(ARD25T103J)	10kΩ,±5%,1/4W	
R 21	CF,(ARD25T221J)	220Ω,±5%,1/4W	
R 22	CF,(ARD25T472J)	4.7kΩ,±5%,1/4W	
R 23	MF,(RN14K2H102J)	1kΩ,±5%,1/2W	
R 24	MF,(RN14K2H102J)	1kΩ,±5%,1/2W	
R 25	MF,(RN14K2H101J)	100Ω,±5%,1/2W	
R 26	MF,(RN14K2H101J)	100Ω,±5%,1/2W	
R 27	Not assigned		

( ): Manufacturer's part number
* : Selected at factory

M-3
44W88386 4/5

Parts List: A2 T-CONTROL (TRANSMITTER) **2**

CKT REF	DESCRIPTION	RATING	NOTE
R 28	MF,(RS1FB3.3KΩJ)	3.3kΩ,±5%,1W	
R 29	CF,(ARD25T331J)	330Ω,±5%,1/4W	
R 30	CF,(ARD25T472J)	4.7kΩ,±5%,1/4W	
R 31	CF,(ARD25T222J)	2.2kΩ,±5%,1/4W	
R 32	CF,(ARD25T222J)	2.2kΩ,±5%,1/4W	
R 33	CF,(ARD25T103J)	10kΩ,±5%,1/4W	
R 34	CF,(ARD25T104J)	100kΩ,±5%,1/4W	
R 35	Not assigned		
R 36	Not assigned		
R 37	Not assigned		
R 38	Not assigned		
R 39	Not assigned		
R 40	CM,var,(RJ-6P 200Ω)	200Ω,1/2W	
R 41	Not assigned		
R 42	Not assigned		
R 43	Not assigned		
R 44	Not assigned		
R 45	MF,(RN14K2E2741D)	2.74kΩ,±0.5%,1/4W	
R 46	MF,(RN14K2E1001D)	1kΩ,±0.5%,1/4W	
R 47	CF,(ARD25T151J)	150Ω,±5%,1/4W	
R 48	CF,(ARD25T104J)	100kΩ,±5%,1/4W	
R 49	Not assigned		
R 50	SIP type,(RRS-8-103JA)	10kΩ x 8,±5%,1/8W	
R 51	SIP type,(RRS-8-103JA)	10kΩ x 8,±5%,1/8W	
R 52	CF,(ARD25T103J)	10kΩ,±5%,1/4W	
R 53	CF,(ARD25T103J)	10kΩ,±5%,1/4W	
R 54	CF,(ARD25T103J)	10kΩ,±5%,1/4W	
R 55	MF,(ERF-2SK3R3)	3.3kΩ,±5%,2W	
R 56	CF,(ARD25T221J)	220Ω,±5%,1/4W	
R 57	CF,(ARD25T102J)	1kΩ,±5%,1/4W	
T 1	Trans,(44T75381)		
T 2	Trans,(44T75381)		
T 3	Trans,(439T36051)		
Z 1	XTAL OSC,(TD308A)	8MHz	
Z 2	Battery,(BR-AE2SP)		

( ): Manufacturer's part number
* : Selected at factory

M-1
44W88386 5/5

Parts List: A1 PATTERN GENERATOR (TRANSMITTER) **3**

CKT REF	DESCRIPTION	RATING	NOTE
C 1	Cer,(CC45CH1H050CY)	5pF,±0.25pF,50V	
C 2	Cer,(CC45CH1H220JY)	22pF,±5%,50V	
C 3	Cer,(CC924CH1H560JJ)	56pF,±5%,50V	
C 4	Cer,(CC45CK1H010CY)	1pF,±0.25pF,50V	
C 5	Cer,(CC924CH1H151JJ)	150pF,±5%,50V	
C 6	Cer,(CC45CH1H330JY)	33pF,±5%,50V	
C 7	Cer,(CC924CH1H221JJ)	220pF,±5%,50V	
C 8	Cer,(CC924CH1H151JJ)	150pF,±5%,50V	
C 9	Cer,(CC45CH1H330JY)	33pF,±5%,50V	
C 10	Cer,(CC924CH1H221JJ)	220pF,±5%,50V	
C 11	Cer,(CC924CH1H471JJ)	470pF,±5%,50V	
C 12	Cer,(CC45CH1H220JY)	22pF,±5%,50V	
C 13	Cer,var,(TZ03R200A)	20pF,100V	
C 14	Cer,(CC924CH1H471JJ)	470pF,±5%,50V	
C 15	Cer,var,(TZ03Z070A)	7pF,100V	
C 16	Cer,var,(TZ03R200A)	20pF,100V	
C 17	Cer,var,(TZ03R200A)	20pF,100V	
C 18	Not assigned		
C 19	Cer,(CK924F1H104Z)	0.1μF,+80/-20%,50V	
C 20	Cer,(CK924F1H104Z)	0.1μF,+80/-20%,50V	
C 21	Cer,(CK924F1H104Z)	0.1μF,+80/-20%,50V	
C 22	Cer,(CK924F1H104Z)	0.1μF,+80/-20%,50V	
C 23	Cer,(CK924F1H104Z)	0.1μF,+80/-20%,50V	
C 24	Cer,(CK924F1H104Z)	0.1μF,+80/-20%,50V	
C 25	Cer,(CK924F1H104Z)	0.1μF,+80/-20%,50V	
C 26	Cer,(CK924F1H104Z)	0.1μF,+80/-20%,50V	
C 27	Cer,(CK924F1H104Z)	0.1μF,+80/-20%,50V	
C 28	Not assigned		
C 29 to C 40	Cer,(CK924F1H104Z)	0.1μF,+80/-20%,50V	
C 41	Cer,(RPE111CH161G50)	160pF,±2%,50V	
C 42	Cer,(RPE111CH161G50)	160pF,±2%,50V	
C 43	Cer,(RPE111CH161G50)	160pF,±2%,50V	
C 44	Cer,(RPE111CH161G50)	160pF,±2%,50V	
C 45	Cer,(RPE111CH161G50)	160pF,±2%,50V	
C 46	Cer,(RPE111CH161G50)	160pF,±2%,50V	
C 47	Cer,(CC924CH1H510JJ)	51pF,±5%,50V	
C 48	Cer,(CC924CH1H510JJ)	51pF,±5%,50V	
C 49	Cer,(CC924CH1H510JJ)	51pF,±5%,50V	
C 50	Cer,(CC924CH1H510JJ)	51pF,±5%,50V	
C 51	Cer,(CC924CH1H510JJ)	51pF,±5%,50V	
C 52	Cer,(CC924CH1H510JJ)	51pF,±5%,50V	
C 53	Cer,(CC45CK1H020CY)	2pF,±0.25pF,50V	
C 54	Cer,(CC45CK1H020CY)	2pF,±0.25pF,50V	
C 55	Cer,(CC45CK1H020CY)	2pF,±0.25pF,50V	
C 56	Cer,(CC45CK1H020CY)	2pF,±0.25pF,50V	

( ): Manufacturer's part number
* : Selected at factory

44W88385 1/14

Parts List: A1 PATTERN GENERATOR (TRANSMITTER) **3**

CKT REF	DESCRIPTION	RATING	NOTE
C 57	Cer,(CC45CK1H020CY)	2pF,±0.25pF,50V	
C 58	Cer,(CC45CK1H020CY)	2pF,±0.25pF,50V	
C 59	Cer,(CK924F1H104Z)	0.1μF,+80/-20%,50V	
C 60	Plast,(ECQ-P1102FZ)	1000pF,±1%,100V	
C 61	Plast,(ECQ-P1102FZ)	1000pF,±1%,100V	
C 62	Plast,(ECQ-P1152FZ)	1500pF,±1%,100V	
C 63	Plast,(ECQ-P1152FZ)	1500pF,±1%,100V	
C 64	Cer,(CK924F1H104Z)	0.1μF,+80/-20%,50V	
C 65	Cer,(CK924F1H104Z)	0.1μF,+80/-20%,50V	
C 66	Not assigned		
C 67	Cer,(CK924F1H104Z)	0.1μF,+80/-20%,50V	
C 68	Cer,(CK924F1H104Z)	0.1μF,+80/-20%,50V	
C 69	Not assigned		
C 70	Not assigned		
C 71 to C 81	Elect,(CE04C1E101A)	100μF,±20%,25V	
C 82	Not assigned		
C 83	Not assigned		
C 84	Not assigned		
C 85 to C 96	Cer,(CK924F1H104Z)	0.1μF,+80/-20%,50V	
C 97	Not assigned		
C 98	Not assigned		
C 99	Not assigned		
C100	Cer,(CK924F1H104Z)	0.1μF,+80/-20%,50V	
C101	Cer,(CK924F1H104Z)	0.1μF,+80/-20%,50V	
C102	Cer,(CK924F1H104Z)	0.1μF,+80/-20%,50V	
C103	Cer,(CK924F1H104Z)	0.1μF,+80/-20%,50V	
C104	Cer,(CK924F1H104Z)	0.1μF,+80/-20%,50V	
C105	Cer,(CK924F1H104Z)	0.1μF,+80/-20%,50V	
C106	Cer,(RPE111CH161G50)	160pF,±2%,50V	
C107	Cer,(CC924CH1H510J)	51pF,±5%,50V	
C108	Cer,(CC45CK1H020CY)	2pF,±0.25pF,50V	
C109	Cer,(CK924F1H104Z)	0.1μF,+80/-20%,50V	
C110	Cer,(CK924F1H104Z)	0.1μF,+80/-20%,50V	
C111	Cer,(CK924C1H103M)	0.01μF,±20%,50V	
C112	Cer,(CK924C1H103M)	0.01μF,±20%,50V	
C113	Cer,(CC924CH1H102J)	1000pF,±5%,50V	
C114	Cer,(CC924CH1H560J)	56pF,±5%,50V	
C115	Cer,(CC924CH1H560J)	56pF,±5%,50V	
C116	Cer,(CK924F1H104Z)	0.1μF,+80/-20%,50V	
C117	Cer,(CC924CH1H101J)	100pF,±5%,50V	
J 1	Cable,(CNF23-34D-AA20S)		

( ): Manufacturer's part number
* : Selected at factory

Parts List: A1 PATTERN GENERATOR (TRANSMITTER) **3**

CKT REF	DESCRIPTION	RATING	NOTE
J 2	Plug,(U-PA1021)		
J 3	Plug,(DF1-15P2.5DSA)	15pins	
J 4	Plug,(CNF3-26P-2.54DS)	26pins	
J 5	Receptacle,(BNC-R-NI)		
J 6	Receptacle,(BNC-R-NI)		
J 7	Receptacle,(JJ-022)		
J 8	Receptacle,(BNC-R-NI)		
J 9	Receptacle,(BNC-R-NI)		
J 10	Receptacle,(BNC-R-NI)		
J 11	Receptacle,(BNC-R-NI)		
J 12	Receptacle,(BNC-R-NI)		
J 13	Receptacle,(BNC-R-NI)		
J 14	Plug,(DF1-5P2.5DSA)	5pins	
J 15	Plug,(DF1-2P2.5DSA)	2pins	
K 1 to K 23	Relay,(SV-5)		
L 1	Coil,(SP0408-1R5K)	1.5μH,±10%	
L 2	Coil,(10K17-85T)	0.358μH	
L 3	Coil,(439T23535)	0.89μH	
L 4	Coil,(439T23535)	0.89μH	
L 5	Coil,(439T23535)	0.89μH	
L 6	Coil,(439T23535)	0.89μH	
L 7	Coil,(439T23535)	0.89μH	
L 8	Coil,(439T23535)	0.89μH	
L 9	Coil,(442T77577)	0.3μH	
L 10	Coil,(442T77577)	0.3μH	
L 11	Coil,(442T77577)	0.3μH	
L 12	Coil,(442T77577)	0.3μH	
L 13	Coil,(442T77577)	0.3μH	
L 14	Coil,(442T77577)	0.3μH	
L 15	Coil,(LF8-470K)	47μH,±10%	
L 16	Coil,(SP0408-3R3)	3.3μH	
L 17	Coil,(SP0408-3R3)	3.3μH	
L 18	Coil,(33T20196E)	4.7μH	
L 19	Coil,(33T20196E)	4.7μH	
L 20	Coil,(439T23535)	0.89μH	
L 21	Coil,(442T77577)	0.3μH	
Q 1 to Q 24	Di,breakdown,(RD3.9E)	3.7 to 4.16V,500mW	

( ): Manufacturer's part number
* : Selected at factory

Parts List: A1 PATTERN GENERATOR (TRANSMITTER) **3**

CKT REF	DESCRIPTION	RATING	NOTE
Q 25	Di,breakdown,(RD2.7E)	2.5 to 2.93V,500mW	
Q 26	Di,breakdown,(RD2.7E)	2.5 to 2.93V,500mW	
Q 27	Di,(1S953)		
Q 28	Not assigned		
Q 29	Di,(1S953)		
Q 30	Di,(1S953)		
Q 31	Di,(1S953)		
Q 32	Di,(1S953)		
Q 33	Not assigned		
Q 34	Di,(1S953)		
Q 35	Not assigned		
Q 36	Tr,(2SC1907)		
Q 37	Tr,(2SC1907)		
Q 38	Tr,(2SC1907)		
Q 39	Not assigned		
Q 40 to Q 89	Tr,(2SC1907)		
Q 90	Tr,(2SC2901)		
Q 91	Tr,(2SC2901)		
Q 92	Tr,(2SC2901)		
Q 93	Tr,(2SC2570)		
Q 94	Tr,(2SC2570)		
Q 95	Tr,(2SC2570)		
Q 96	Tr,(2SC2570)		
Q 97	Tr,(2SA1206)		
Q 98	Tr,(2SA1206)		
Q 99	Di,(1S953)		
Q100	Di,(1S953)		
Q101	IC,(AB109CSP)		
Q102	IC,(HD10124)		
Q103	IC,(74F74PC)		
Q104	Not assigned		
Q105	IC,(μPD8253C-2)		
Q106	IC,(74LS04)		
Q107	IC,(HD10101)		
Q108	IC,(HD10116)		
Q109	IC,(HD10101)		
Q110	IC,(HD10101)		
Q111	IC,(HD10124)		
Q112	IC,(TD62003P)		
Q113	Not assigned		
Q114	IC,(74LS38)		
Q115	Not assigned		
Q116	Not assigned		
Q117	IC,(μPD8255AC-2)		
Q118	IC,(HD10124)		

( ): Manufacturer's part number
* : Selected at factory

Parts List: A1 PATTERN GENERATOR (TRANSMITTER) **3**

CKT REF	DESCRIPTION	RATING	NOTE
Q119	IC,(74F174PC)		
Q120	IC,(HD10124)		
Q121	IC,(74F174PC)		
Q122	IC,(HD10124)		
Q123	IC,(74S04)		
Q124	IC,(74S04)		
Q125	IC,(74S00)		
Q126	IC,(74S64)		
Q127	IC,(74LS04)		
Q128	Not assigned		
Q129	Not assigned		
Q130	IC,(74LS74A)		
Q131	Not assigned		
Q132	IC,(74LS03)		
Q133	IC,(HD10125)		
Q134	IC,(74S00)		
Q135	IC,(74F74PC)		
Q136	IC,(HD10125)		
Q137	IC,(HD10125)		
Q138	IC,(HD7400P)		
Q139	IC,(HD7400P)		
Q140	IC,(HD10116)		
Q141	IC,(74S00)		
Q142	IC,(74S00)		
Q143	IC,(74LS04)		
Q144	IC,(74LS86)		
Q145	IC,(74LS32)		
Q146	IC,(74LS139)		
Q147	IC,(74LS153)		
Q148	IC,(74LS175)		
Q149	IC,(74LS74A)		
Q150	IC,(74LS54)		
Q151	IC,(74LS08)		
Q152	IC,(TD62003P)		
Q153	IC,(74LS123)		
Q154	Not assigned		
Q155	Di,breakdown,(RD2.7E)	2.5 to 2.93V,500mW	
Q156	Di,breakdown,(RD2.7E)	2.5 to 2.93V,500mW	
Q157	Di,(1S953)		
Q158	Di,(1S953)		
Q159	Di,(1S953)		
Q160	Di,(1S953)		
Q161	Di,breakdown,(RD3.6E)	3.4 to 3.845V,500mW	
Q162	Di,(1S953)		
Q163	Di,(1S953)		
Q164	Di,(1S953)		
Q165	Di,(1S953)		

( ): Manufacturer's part number
* : Selected at factory

Parts List: A1 PATTERN GENERATOR (TRANSMITTER) **3**

CKT REF	DESCRIPTION	RATING	NOTE
Q166	D1,breakdown,(RD3.6E)	3.4 to 3.845V,500mW	
Q167	D1,(1S953)		
Q168	D1,(1S953)		
Q169	D1,(1S953)		
Q170	D1,(1S953)		
Q171	D1,(1S953)		
Q172	D1,(1S953)		
R 1	CF,(ARD25T102J)	1kΩ,±5%,1/4W	
R 2	CF,(ARD25T472J)	4.7kΩ,±5%,1/4W	
R 3	CF,(ARD25T103J)	10kΩ,±5%,1/4W	
R 4	CF,(ARD25T681J)	680Ω,±5%,1/4W	
R 5	CF,(ARD25T473J)	47kΩ,±5%,1/4W	
R 6	CF,(ARD25T473J)	47kΩ,±5%,1/4W	
R 7	CF,(ARD25T102J)	1kΩ,±5%,1/4W	
R 8	CF,(ARD25T102J)	1kΩ,±5%,1/4W	
R 9	CF,(ARD25T222J)	2.2kΩ,±5%,1/4W	
R 10	CF,(ARD25T472J)	4.7kΩ,±5%,1/4W	
R 11	CF,(ARD25T222J)	2.2kΩ,±5%,1/4W	
R 12	CF,(ARD25T472J)	4.7kΩ,±5%,1/4W	
R 13	CF,(ARD25T222J)	2.2kΩ,±5%,1/4W	
R 14	CF,(ARD25T472J)	4.7kΩ,±5%,1/4W	
R 15	CF,(ARD25T222J)	2.2kΩ,±5%,1/4W	
R 16	CF,(ARD25T101J)	100Ω,±5%,1/4W	
R 17	CF,(ARD25T471J)	470Ω,±5%,1/4W	
R 18	CF,(ARD25T222J)	2.2kΩ,±5%,1/4W	
R 19	Not assigned		
R 20	CF,(ARD25T271J)	270Ω,±5%,1/4W	
R 21	CF,(ARD25T391J)	390Ω,±5%,1/4W	
R 22	CF,(ARD25T821J)	820Ω,±5%,1/4W	
R 23	CF,(ARD25T101J)	100Ω,±5%,1/4W	
R 24	Not assigned		
R 25	Not assigned		
R 26	Not assigned		
R 27	CF,(ARD25T102J)	1kΩ,±5%,1/4W	
R 28	CF,(ARD25T102J)	1kΩ,±5%,1/4W	
R 29	CF,(ARD25T471J)	470Ω,±5%,1/4W	
R 30	CF,(ARD25T151J)	150Ω,±5%,1/4W	
R 31	CF,(ARD25T102J)	1kΩ,±5%,1/4W	
R 32	Not assigned		
R 33	CF,(ARD25T471J)	470Ω,±5%,1/4W	
R 34	CF,(ARD25T151J)	150Ω,±5%,1/4W	
R 35	CF,(ARD25T102J)	1kΩ,±5%,1/4W	
R 36	CF,(ARD25T220J)	22Ω,±5%,1/4W	
R 37	Not assigned		
R 38	Not assigned		

( ): Manufacturer's part number
* : Selected at factory

44W88385 6/14

Parts List: A1 PATTERN GENERATOR (TRANSMITTER) **3**

CKT REF	DESCRIPTION	RATING	NOTE
R 39	Not assigned		
R 40	CF,(ARD25T122J)	1.2kΩ,±5%,1/4W	
R 41	Not assigned		
R 42	CF,(ARD25T122J)	1.2kΩ,±5%,1/4W	
R 43	Not assigned		
R 44	CF,(ARD25T122J)	1.2kΩ,±5%,1/4W	
R 45	CM,var,(RJ-6P 2KΩ)	2kΩ,1/2W	
R 46	CM,var,(RJ-6P 2KΩ)	2kΩ,1/2W	
R 47	CM,var,(RJ-6P 500Ω)	500Ω,1/2W	
R 48	CM,var,(RJ-6P 500Ω)	500Ω,1/2W	
R 49	CM,var,(RJ-6P 500Ω)	500Ω,1/2W	
R 50	Not assigned		
R 51	CF,(ERD10TJ221A)	220Ω,±5%,1/8W	
R 52	CF,(ERD10TJ221A)	220Ω,±5%,1/8W	
R 53	CF,(ARD25T511J)	510Ω,±5%,1/4W	
R 54	CF,(ARD25T511J)	510Ω,±5%,1/4W	
R 55	CF,(ERD10TJ561A)	560Ω,±5%,1/8W	
R 56	CF,(ERD10TJ471A)	470Ω,±5%,1/8W	
R 57	CF,(ARD25T331J)	330Ω,±5%,1/4W	
R 58	CF,(ARD25T750J)	75Ω,±5%,1/4W	
R 59	CF,(ERD10TJ221A)	220Ω,±5%,1/8W	
R 60	CF,(ERD10TJ221A)	220Ω,±5%,1/8W	
R 61	CF,(ARD25T511J)	510Ω,±5%,1/4W	
R 62	CF,(ARD25T511J)	510Ω,±5%,1/4W	
R 63	CF,(ERD10TJ561A)	560Ω,±5%,1/8W	
R 64	CF,(ERD10TJ471A)	470Ω,±5%,1/8W	
R 65	CF,(ARD25T331J)	330Ω,±5%,1/4W	
R 66	CF,(ARD25T750J)	75Ω,±5%,1/4W	
R 67	CF,(ARD25T151J)	150Ω,±5%,1/4W	
R 68	CF,(ERD10TJ221A)	220Ω,±5%,1/8W	
R 69	CF,(ERD10TJ221A)	220Ω,±5%,1/8W	
R 70	CF,(ARD25T511J)	510Ω,±5%,1/4W	
R 71	CF,(ARD25T511J)	510Ω,±5%,1/4W	
R 72	CF,(ERD10T561A)	560Ω,±5%,1/8W	
R 73	CF,(ERD10TJ471A)	470Ω,±5%,1/8W	
R 74	CF,(ARD25T331J)	330Ω,±5%,1/4W	
R 75	CF,(ARD25T750J)	75Ω,±5%,1/4W	
R 76	CF,(ERD10TJ221A)	220Ω,±5%,1/8W	
R 77	CF,(ERD10TJ221A)	220Ω,±5%,1/8W	
R 78	CF,(ARD25T511J)	510Ω,±5%,1/4W	
R 79	CF,(ARD25T511J)	510Ω,±5%,1/4W	
R 80	CF,(ERD10TJ561A)	560Ω,±5%,1/8W	
R 81	CF,(ERD10TJ471A)	470Ω,±5%,1/8W	
R 82	CF,(ARD25T331J)	330Ω,±5%,1/4W	
R 83	CF,(ARD25T750J)	75Ω,±5%,1/4W	
R 84	CF,(ARD25T151J)	150Ω,±5%,1/4W	
R 85	CF,(ERD10TJ221A)	220Ω,±5%,1/8W	

( ): Manufacturer's part number
* : Selected at factory

44W88385 7/14

Parts List: A1 PATTERN GENERATOR (TRANSMITTER) **3**

CKT REF	DESCRIPTION	RATING	NOTE
R 86	CF,(ERD10TJ221A)	220Ω,±5%,1/8W	
R 87	CF,(ARD25T511J)	510Ω,±5%,1/4W	
R 88	CF,(ARD25T511J)	510Ω,±5%,1/4W	
R 89	CF,(ERD10TJ561A)	560Ω,±5%,1/8W	
R 90	CF,(ERD10TJ471A)	470Ω,±5%,1/8W	
R 91	CF,(ARD25T331J)	330Ω,±5%,1/4W	
R 92	CF,(ARD25T750J)	75Ω,±5%,1/4W	
R 93	CF,(ERD25T221A)	220Ω,±5%,1/8W	
R 94	CF,(ERD10TJ221A)	220Ω,±5%,1/8W	
R 95	CF,(ARD25T511J)	510Ω,±5%,1/4W	
R 96	CF,(ARD25T511J)	510Ω,±5%,1/4W	
R 97	CF,(ERD10TJ561A)	560Ω,±5%,1/8W	
R 98	CF,(ERD10TJ471A)	470Ω,±5%,1/8W	
R 99	CF,(ARD25T331J)	330Ω,±5%,1/4W	
R100	CF,(ARD25T750J)	75Ω,±5%,1/4W	
R101	CF,(ARD25T151J)	150Ω,±5%,1/4W	
R102	CF,(ERD10TJ221A)	220Ω,±5%,1/8W	
R103	CF,(ERD10TJ221A)	220Ω,±5%,1/8W	
R104	CF,(ARD25T511J)	510Ω,±5%,1/4W	
R105	CF,(ARD25T511J)	510Ω,±5%,1/4W	
R106	CF,(ERD10TJ561A)	560Ω,±5%,1/8W	
R107	CF,(ERD10TJ471A)	470Ω,±5%,1/8W	
R108	CF,(ARD25T331J)	330Ω,±5%,1/4W	
R109	CF,(ARD25T750J)	75Ω,±5%,1/4W	
R110	CF,(ERD10TJ221A)	220Ω,±5%,1/8W	
R111	CF,(ERD10TJ221A)	220Ω,±5%,1/8W	
R112	CF,(ARD25T511J)	510Ω,±5%,1/4W	
R113	CF,(ARD25T511J)	510Ω,±5%,1/4W	
R114	CF,(ERD10TJ561A)	560Ω,±5%,1/8W	
R115	CF,(ERD10TJ471A)	470Ω,±5%,1/8W	
R116	CF,(ARD25T331J)	330Ω,±5%,1/4W	
R117	CF,(ARD25T750J)	75Ω,±5%,1/4W	
R118	CF,(ARD25T151J)	150Ω,±5%,1/4W	
R119	CF,(ERD10TJ221A)	220Ω,±5%,1/8W	
R120	CF,(ERD10TJ221A)	220Ω,±5%,1/8W	
R121	CF,(ARD25T511J)	510Ω,±5%,1/4W	
R122	CF,(ARD25T511J)	510Ω,±5%,1/4W	
R123	CF,(ERD10TJ561A)	560Ω,±5%,1/8W	
R124	CF,(ERD10TJ471A)	470Ω,±5%,1/8W	
R125	CF,(ARD25T331J)	330Ω,±5%,1/4W	
R126	CF,(ARD25T750J)	75Ω,±5%,1/4W	
R127	CF,(ERD10TJ221A)	220Ω,±5%,1/8W	
R128	CF,(ERD10TJ221A)	220Ω,±5%,1/8W	
R129	CF,(ARD25T511J)	510Ω,±5%,1/4W	
R130	CF,(ARD25T511J)	510Ω,±5%,1/4W	
R131	CF,(ARD25T561J)	560Ω,±5%,1/4W	
R132	CF,(ARD25T471J)	470Ω,±5%,1/4W	

( ): Manufacturer's part number
* : Selected at factory

44W88385 8/14

Parts List: A1 PATTERN GENERATOR (TRANSMITTER) **3**

CKT REF	DESCRIPTION	RATING	NOTE
R133	CF,(ARD25T331J)	330Ω,±5%,1/4W	
R134	CF,(ARD25T750J)	75Ω,±5%,1/4W	
R135	CF,(ARD25T151J)	150Ω,±5%,1/4W	
R136	CF,(ERD10TJ221A)	220Ω,±5%,1/8W	
R137	CF,(ERD10TJ221A)	220Ω,±5%,1/8W	
R138	CF,(ARD25T511J)	510Ω,±5%,1/4W	
R139	CF,(ARD25T511J)	510Ω,±5%,1/4W	
R140	CF,(ERD10TJ561A)	560Ω,±5%,1/8W	
R141	CF,(ERD10TJ471A)	470Ω,±5%,1/8W	
R142	CF,(ARD25T331J)	330Ω,±5%,1/4W	
R143	CF,(ARD25T750J)	75Ω,±5%,1/4W	
R144	CF,(ERD10TJ221A)	220Ω,±5%,1/8W	
R145	CF,(ERD10TJ221A)	220Ω,±5%,1/8W	
R146	CF,(ARD25T511J)	510Ω,±5%,1/4W	
R147	CF,(ARD25T511J)	510Ω,±5%,1/4W	
R148	CF,(ERD10TJ561A)	560Ω,±5%,1/8W	
R149	CF,(ERD10TJ471A)	470Ω,±5%,1/8W	
R150	CF,(ARD25T331J)	330Ω,±5%,1/4W	
R151	CF,(ARD25T750J)	75Ω,±5%,1/4W	
R152	CF,(ARD25T151J)	150Ω,±5%,1/4W	
R153	MF,(RN14K2E41R2D)	41.2Ω,±0.5%,1/4W	
R154	CF,(ARD25T750J)	75Ω,±5%,1/4W	
R155	CF,(ARD25T750J)	75Ω,±5%,1/4W	
R156	MF,(RN14K2E1370D)	137Ω,±0.5%,1/4W	
R157	CF,(ARD25T6R8J)	6.8Ω,±5%,1/4W	
R158	CF,(ARD25T750J)	75Ω,±5%,1/4W	
R159	CF,(ARD25T750J)	75Ω,±5%,1/4W	
R160	MF,(RN14K2E8250D)	825Ω,±0.5%,1/4W	
R161	MF,(RN14K2E41R2D)	41.2Ω,±0.5%,1/4W	
R162	CF,(ARD25T750J)	75Ω,±5%,1/4W	
R163	CF,(ARD25T750J)	75Ω,±5%,1/4W	
R164	MF,(RN14K2E1370D)	137Ω,±0.5%,1/4W	
R165	CF,(ARD25T6R8J)	6.8Ω,±5%,1/4W	
R166	CF,(ARD25T750J)	75Ω,±5%,1/4W	
R167	CF,(ARD25T750J)	75Ω,±5%,1/4W	
R168	MF,(RN14K2E8250D)	825Ω,±0.5%,1/4W	
R169	MF,(RN14K2E41R2D)	41.2Ω,±0.5%,1/4W	
R170	CF,(ARD25T750J)	75Ω,±5%,1/4W	
R171	CF,(ARD25T750J)	75Ω,±5%,1/4W	
R172	MF,(RN14K2E1370D)	137Ω,±0.5%,1/4W	
R173	CF,(ARD25T6R8J)	6.8Ω,±5%,1/4W	
R174	CF,(ARD25T750J)	75Ω,±5%,1/4W	
R175	CF,(ARD25T750J)	75Ω,±5%,1/4W	
R176	MF,(RN14K2E8250D)	825Ω,±0.5%,1/4W	
R177	MF,(RN14K2E41R2D)	41.2Ω,±0.5%,1/4W	
R178	CF,(ARD25T750J)	75Ω,±5%,1/4W	
R179	CF,(ARD25T750J)	75Ω,±5%,1/4W	

( ): Manufacturer's part number
* : Selected at factory

44W88385 9/14

Parts List: A1 PATTERN GENERATOR (TRANSMITTER) **3**

CKT REF	DESCRIPTION	RATING	NOTE
R180	MF,(RN14K2E1370D)	137Ω,±0.5%,1/4W	
R181	CF,(ARD25T6R8J)	6.8Ω,±5%,1/4W	
R182	CF,(ARD25T750J)	75Ω,±5%,1/4W	
R183	CF,(ARD25T750J)	75Ω,±5%,1/4W	
R184	MF,(RN14K2E8250D)	825Ω,±0.5%,1/4W	
R185	MF,(RN14K2E41R2D)	41.2Ω,±0.5%,1/4W	
R186	CF,(ARD25T750J)	75Ω,±5%,1/4W	
R187	CF,(ARD25T750J)	75Ω,±5%,1/4W	
R188	MF,(RN14K2E1370D)	137Ω,±0.5%,1/4W	
R189	CF,(ARD25T6R8J)	6.8Ω,±5%,1/4W	
R190	CF,(ARD25T750J)	75Ω,±5%,1/4W	
R191	CF,(ARD25T750J)	75Ω,±5%,1/4W	
R192	MF,(RN14K2E8250D)	825Ω,±0.5%,1/4W	
R193	MF,(RN14K2E41R2D)	41.2Ω,±0.5%,1/4W	
R194	CF,(ARD25T750J)	75Ω,±5%,1/4W	
R195	CF,(ARD25T750J)	75Ω,±5%,1/4W	
R196	MF,(RN14K2E1370D)	137Ω,±0.5%,1/4W	
R197	CF,(ARD25T6R8J)	6.8Ω,±5%,1/4W	
R198	CF,(ARD25T750J)	75Ω,±5%,1/4W	
R199	CF,(ARD25T750J)	75Ω,±5%,1/4W	
R200	MF,(RN14K2E8250D)	825Ω,±0.5%,1/4W	
R201	MF,(RN14K2E1130D)	113Ω,±0.5%,1/4W	
R202	MF,(RN14K2E1740D)	174Ω,±0.5%,1/4W	
R203	MF,(RN14K2E1130D)	113Ω,±0.5%,1/4W	
R204	MF,(RN14K2E1130D)	113Ω,±0.5%,1/4W	
R205	MF,(RN14K2E1740D)	174Ω,±0.5%,1/4W	
R206	MF,(RN14K2E1130D)	113Ω,±0.5%,1/4W	
R207	MF,(RN14K2E1130D)	113Ω,±0.5%,1/4W	
R208	MF,(RN14K2E1740D)	174Ω,±0.5%,1/4W	
R209	MF,(RN14K2E1130D)	113Ω,±0.5%,1/4W	
R210	MF,(RN14K2E1130D)	113Ω,±0.5%,1/4W	
R211	MF,(RN14K2E1740D)	174Ω,±0.5%,1/4W	
R212	MF,(RN14K2E1130D)	113Ω,±0.5%,1/4W	
R213	MF,(RN14K2E1130D)	113Ω,±0.5%,1/4W	
R214	MF,(RN14K2E1740D)	174Ω,±0.5%,1/4W	
R215	MF,(RN14K2E1130D)	113Ω,±0.5%,1/4W	
R216	Not assigned		
R217	Not assigned		
R218	Not assigned		
R219	Not assigned		
R220	Not assigned		
R221	Not assigned		
R222	Not assigned		
R223	Not assigned		
R224	Not assigned		
R225	CF,(ARD25T391J)	390Ω,±5%,1/4W	
R226	CF,(ARD25T391J)	390Ω,±5%,1/4W	

( ): Manufacturer's part number
* : Selected at factory

44W88385 10/14

Parts List: A1 PATTERN GENERATOR (TRANSMITTER) **3**

CKT REF	DESCRIPTION	RATING	NOTE
R227	CF,(ARD25T221J)	220Ω,±5%,1/4W	
R228	CF,(ARD25T221J)	220Ω,±5%,1/4W	
R229	CF,(ARD25T100J)	10Ω,±5%,1/4W	
R230	CF,(ARD25T100J)	10Ω,±5%,1/4W	
R231	CF,(ARD25T681J)	680Ω,±5%,1/4W	
R232	CF,(ARD25T681J)	680Ω,±5%,1/4W	
R233	CF,(ARD25T331J)	330Ω,±5%,1/4W	
R234	CF,(ARD25T102J)	1kΩ,±5%,1/4W	
R235	CF,(ARD25T391J)	390Ω,±5%,1/4W	
R236	CF,(ARD25T751J)	750Ω,±5%,1/4W	
R237	CF,(ARD25T222J)	2.2kΩ,±5%,1/4W	
R238	CF,(ARD25T271J)	270Ω,±5%,1/4W	
R239	CF,(ARD25T560J)	56Ω,±5%,1/4W	
R240	CF,(ARD25T560J)	56Ω,±5%,1/4W	
R241	CF,(ARD25T330J)	33Ω,±5%,1/4W	
R242	CF,(ARD25T560J)	56Ω,±5%,1/4W	
R243	CF,(ARD25T560J)	56Ω,±5%,1/4W	
R244	CF,(ARD25T101J)	100Ω,±5%,1/4W	
R245	CF,(ARD25T560J)	56Ω,±5%,1/4W	
R246	CF,(ARD25T560J)	56Ω,±5%,1/4W	
R247	CF,(ARD25T330J)	33Ω,±5%,1/4W	
R248	CF,(ARD25T560J)	56Ω,±5%,1/4W	
R249	CF,(ARD25T560J)	56Ω,±5%,1/4W	
R250	CF,(ARD25T101J)	100Ω,±5%,1/4W	
R251	CF,(ARD25T152J)	1.5kΩ,±5%,1/4W	
R252	CF,(ARD25T152J)	1.5kΩ,±5%,1/4W	
R253	CF,(ARD25T101J)	100Ω,±5%,1/4W	
R254	CF,(ARD25T101J)	100Ω,±5%,1/4W	
R255	MF,(RN14K2E1780D)	178Ω,±0.5%,1/4W	
R256	Not assigned		
R257	CF,(ARD25T750J)	75Ω,±5%,1/4W	
R258	CF,(ARD25T102J)	1kΩ,±5%,1/4W	
R259	CF,(ARD25T820J)	82Ω,±5%,1/4W	
R260	CF,(ARD25T131J)	130Ω,±5%,1/4W	
R261	Not assigned		
R262	CF,(ARD25T101J)	100Ω,±5%,1/4W	
R263	CF,(ARD25T101J)	100Ω,±5%,1/4W	
R264	Not assigned		
R265	Not assigned		
R266	MF,(RN14K2E1780D)	178Ω,±0.5%,1/4W	
R267	Not assigned		
R268	CF,(ARD25T750J)	75Ω,±5%,1/4W	
R269	CF,(ARD25T102J)	1kΩ,±5%,1/4W	
R270	CF,(ARD25T821J)	820Ω,±5%,1/4W	
R271	CF,(ARD25T471J)	470Ω,±5%,1/4W	
R272	CF,(ARD25T101J)	100Ω,±5%,1/4W	
R273	CF,(ARD25T391J)	390Ω,±5%,1/4W	

( ): Manufacturer's part number
* : Selected at factory

44W88385 11/14

Parts List: A1 PATTERN GENERATOR (TRANSMITTER) **3**

CKT REF	DESCRIPTION	RATING	NOTE
R274	CF,(ARD25T101J)	100Ω,±5%,1/4W	
R275	CF,(ARD25T331J)	330Ω,±5%,1/4W	
R276	CF,(ARD25T101J)	100Ω,±5%,1/4W	
R277	CF,(ARD25T103J)	10kΩ,±5%,1/4W	
R278	CF,(ARD25T101J)	100Ω,±5%,1/4W	
R279	Not assigned		
R280	Not assigned		
R281 to R292	CM,var,(RJ-6P 100Ω)	100Ω,1/2W	
R293	CM,var,(RJ-6P 200Ω)	200Ω,1/2W	
R294	CM,var,(RJ-6P 200Ω)	200Ω,1/2W	
R295	CM,var,(RJ-6P 100Ω)	100Ω,1/2W	
R296	CM,var,(RJ-6P 200Ω)	200Ω,1/2W	
R297	Not assigned		
R298	CM,var,(RJ-6P 100Ω)	100Ω,1/2W	
R299	CM,var,(RJ-6P 200Ω)	200Ω,1/2W	
R300	Not assigned		
R301	CM,var,(RJ-6P 100Ω)	100Ω,1/2W	
R302	CM,var,(RJ-6P 200Ω)	200Ω,1/2W	
R303	Not assigned		
R304	CM,var,(RJ-6P 100Ω)	100Ω,1/2W	
R305	CM,var,(RJ-6P 200Ω)	200Ω,1/2W	
R306	Not assigned		
R307	Not assigned		
R308	Not assigned		
R309	Not assigned		
R310	Not assigned		
R311	SIP type,(RRS-8-472JA)	4.7kΩ x 8,±5%,1/8W	
R312	SIP type,(RRS-4-103JA)	10kΩ x 4,±5%,1/8W	
R313	SIP type,(RRS-6-102JA)	1kΩ x 6,±5%,1/8W	
R314	SIP type,(RRS-4-471JA)	470Ω x 4,±5%,1/8W	
R315	SIP type,(RRS-4-471JA)	470Ω x 4,±5%,1/8W	
R316	SIP type,(RRS-4-471JA)	470Ω x 4,±5%,1/8W	
R317	CF,(ARD25T471J)	470Ω,±5%,1/4W	
R318	SIP type,(RRS-4-471JA)	470Ω x 4,±5%,1/8W	
R319	SIP type,(RRS-4-471JA)	470Ω x 4,±5%,1/8W	
R320	SIP type,(RRS-4-471JA)	470Ω x 4,±5%,1/8W	
R321	SIP type,(RRS-6-471JA)	470Ω x 6,±5%,1/8W	
R322	SIP type,(RRS-6-471JA)	470Ω x 6,±5%,1/8W	
R323	SIP type,(RRS-6-471JA)	470Ω x 6,±5%,1/8W	
R324	Not assigned		
R325	CF,(ARD25T301J)	300Ω,±5%,1/4W	
R326	CF,(ARD25T750J)	75Ω,±5%,1/4W	
R327	CF,(ARD25T471J)	470Ω,±5%,1/4W	
R328	CM,var,(RJ-6P 2kΩ)	2kΩ,1/2W	
R329	CF,(ARD25T102J)	1kΩ,±5%,1/4W	

( ): Manufacturer's part number
* : Selected at factory

44W88385 12/14

Parts List: A1 PATTERN GENERATOR (TRANSMITTER) **3**

CKT REF	DESCRIPTION	RATING	NOTE
R330	CF,(ARD25T103J)	10kΩ,±5%,1/4W	
R331	CF,(ARD25T101J)	100Ω,±5%,1/4W	
R332	CF,(ARD25T301J)	300Ω,±5%,1/4W	
R333	CF,(ARD25T101J)	100Ω,±5%,1/4W	
R334	CF,(ARD25T750J)	75Ω,±5%,1/4W	
R335	CF,(ARD25T103J)	10kΩ,±5%,1/4W	
R336	CF,(ARD25T103J)	10kΩ,±5%,1/4W	
R337	CF,(ARD25T103J)	10kΩ,±5%,1/4W	
R338	CF,(ARD25T471J)	470Ω,±5%,1/4W	
R339	Not assigned		
R340	Not assigned		
R341	CF,(ARD25T181J)	180Ω,±5%,1/4W	
R342	CF,(ARD25T111J)	110Ω,±5%,1/4W	
R343	CF,(ARD25T181J)	180Ω,±5%,1/4W	
R344	CF,(ARD25T111J)	110Ω,±5%,1/4W	
R345	Not assigned		
R346	Not assigned		
R347	Not assigned		
R348	Not assigned		
R349	Not assigned		
R350	Not assigned		
R351	CF,(ARD25T6R8J)	6.8Ω,±5%,1/4W	
R352	MF,(RN14K2E41R2D)	41.2Ω,±0.5%,1/4W	
R353	CF,(ARD25T750J)	75Ω,±5%,1/4W	
R354	CF,(ARD25T750J)	75Ω,±5%,1/4W	
R355	CF,(ARD25T750J)	75Ω,±5%,1/4W	
R356	CF,(ARD25T750J)	75Ω,±5%,1/4W	
R357	MF,(RN14K2E1370D)	137Ω,±0.5%,1/4W	
R358	MF,(RN14K2E8250D)	825Ω,±0.5%,1/4W	
R359	CF,(ARD25T103J)	10kΩ,±5%,1/4W	
R360	CF,(ARD25T821J)	820Ω,±5%,1/4W	
R361	CM,var,(RJ-6P 500Ω)	500Ω,1/2W	
R362	CF,(ARD25T272J)	2.7kΩ,±5%,1/4W	
R363	CF,(ARD25T511J)	510Ω,±5%,1/4W	
R364	CF,(ARD25T511J)	510Ω,±5%,1/4W	
R365	CM,var,(RJ-6P 1kΩ)	1kΩ,1/2W	
R366	CF,(ARD25T511J)	510Ω,±5%,1/4W	
R367	CF,(ARD25T821J)	820Ω,±5%,1/4W	
R368	CM,var,(RJ-6P 500Ω)	500Ω,1/2W	
R369	CF,(ARD25T272J)	2.7kΩ,±5%,1/4W	
R370	CF,(ARD25T511J)	510Ω,±5%,1/4W	
R371	CF,(ARD25T223J)	22kΩ,±5%,1/4W	
R372	CF,(ARD25T223J)	22kΩ,±5%,1/4W	
R373	CF,(ARD25T333J)	33kΩ,±5%,1/4W	
R374	Not assigned		
R375	Not assigned		
R376	Not assigned		

( ): Manufacturer's part number
* : Selected at factory

44W88385 13/14

Parts List: A1 PATTERN GENERATOR (TRANSMITTER) **3**

CKT REF	DESCRIPTION	RATING	NOTE
R377	CF,(ARD25T221J)	220Ω,±5%,1/4W	
R378	CF,(ARD25T221J)	220Ω,±5%,1/4W	
R379	CF,(ARD25T150J)	15Ω,±5%,1/4W	
R380	CF,(ARD25T150J)	15Ω,±5%,1/4W	
R381	CF,(ARD25T102J)	1kΩ,±5%,1/4W	
R382	CF,(ARD25T102J)	1kΩ,±5%,1/4W	
R383	Not assigned		
R384	Not assigned		
R385	CF,(ARD25T103J)	10kΩ,±5%,1/4W	
R386	CF,(ARD25T101J)	100Ω,±5%,1/4W	
R387	CM,var,(RJ-6P 5KΩ)	5kΩ,1/2W	
R388	CF,(ARD25T471J)	470Ω,±5%,1/4W	
R389	Not assigned		
R390 to R401	CM,var,(RG04B202H)	2kΩ,1/4W	
S 1	DIP,(DIP-A(4))		
T 1	Trans,(439T23519)		
X 1	XTAL,(44X80043)	44.736MHz	
X 2	XTAL,(44X68612C)	12.624MHz	
X 3	XTAL,(44X68612E)	12.608MHz	
X 4	XTAL,(44X68612A)	6.176MHz	

( ): Manufacturer's part number
* : Selected at factory

44W88385 | 14/14

Parts List: A3 T-DISPLAY (TRANSMITTER) **4**

CKT REF	DESCRIPTION	RATING	NOTE
C 1	Elect,(KME10T-220M)	220μF,±20%,10V	
C 2	Cer,(CK924F1H104Z)	0.1μF,+80/-20%,50V	
C 3	Cer,(CC924CH1H471J)	470pF,±5%,50V	
C 4	Elect,(KME10T-220M)	220μF,±20%,10V	
C 5	Elect,(KME10T-220M)	220μF,±20%,10V	
J 1	Plug,(CNF3-20P-2.54DSA)	20pins	
Q 1	IC,(μPD8279C-2)		
Q 2	IC,(74LS139)		
Q 3	IC,(74HC238)		
Q 4	IC,(TD62381P)		
Q 5	IC,(TD62785AP)		
Q 6	IC,(74HC238P)		
Q 7	IC,(TD62381P)		
Q 8	IC,(74HC00)		
Q 9	Not assigned		
Q 10	LED,(LN442YPH)		
Q 11 to Q 41	LED,(TLG209)		
Q 42	LED,(LT-9200N)		
Q 43	LED,(LT-9200N)		
Q 44	Not assigned		
Q 45	Not assigned		
Q 46	Not assigned		
Q 47	Not assigned		
Q 48	Not assigned		
Q 49	Not assigned		
Q 50	IC,(LN513GK)		
Q 51	IC,(LN513GK)		
Q 52	IC,(LN513GK)		
Q 53	IC,(LN513GK)		
Q 54	IC,(LN513GK)		
Q 55	IC,(LN513GK)		
Q 56	IC,(LN513GK)		
Q 57	IC,(LN513GK)		
R 1	SIP type,(RRS-4-330JB)	33Ω x 4,±5%,1/8W	
R 2	SIP type,(RRS-4-330JB)	33Ω x 4,±5%,1/8W	
R 3	SIP type,(RRS-6-223JB)	22kΩ x 6,±5%,1/8W	
R 4	SIP type,(RRS-4-223JA)	22kΩ x 4,±5%,1/8W	
R 5	SIP type,(RRS-4-330JB)	33Ω x 4,±5%,1/8W	
R 6	SIP type,(RRS-4-330JB)	33Ω x 4,±5%,1/8W	

( ): Manufacturer's part number
* : Selected at factory

44W88387 | 1/2

Parts List: A3 T-DISPLAY (TRANSMITTER) **4**

CKT REF	DESCRIPTION	RATING	NOTE
R 7	SIP type,(RRS-4-330JB)	33Ω x 4,±5%,1/8W	
S 1 to S 19	Switch,(TM1-01)		

( ): Manufacturer's part number
* : Selected at factory

44W88387 | 2/2

Parts List: A4 JITTER MODULATION (TRANSMITTER) **5**

CKT REF	DESCRIPTION	RATING	NOTE
C 1	Cer,(CC45CH1H151JY)	150pF,±5%,50V	
C 2	Cer,(CC45CH1H101JY)	100pF,±5%,50V	
C 3	Cer,(CC45CH1H100DY)	10pF,±0.25%,50V	
C 4	Cer,(CC924CH1H681J)	680pF,±5%,50V	
C 5	Cer,(CC924CH1H471J)	470pF,±5%,50V	
C 6	Cer,(CC924CH1H101J)	100pF,±5%,50V	
C 7	Plast,(ECQ-P1132FZ)	1300pF,±1%,100V	
C 8	Plast,(ECQ-P1102FZ)	1000pF,±1%,100V	
C 9	Cer,(RPE111CH201G50)	200pF,±2%,50V	
C 10	Plast,(ECQ-P1272FZ)	2700pF,±1%,100V	
C 11	Plast,(ECQ-P1202FZ)	2000pF,±1%,100V	
C 12	Cer,(CC924CH1H391J)	390pF,±5%,50V	
C 13	Cer,(CC45CH1H151JY)	150pF,±5%,50V	
C 14	Cer,(CC45CH1H101JY)	100pF,±5%,50V	
C 15	Cer,(CC45CH1H100DY)	10pF,±0.25%,50V	
C 16	Cer,(CC924CH1H821J)	820pF,±5%,50V	
C 17	Cer,(CC924CH1H621J)	620pF,±5%,50V	
C 18	Cer,(CC924CH1H101J)	100pF,±5%,50V	
C 19	Plast,(ECQ-P1132FZ)	1300pF,±1%,100V	
C 20	Plast,(ECQ-P1102FZ)	1000pF,±1%,100V	
C 21	Cer,(RPE111CH201G50)	200pF,±2%,50V	
C 22	Plast,(ECQ-P1272FZ)	2700pF,±1%,100V	
C 23	Plast,(ECQ-P1202FZ)	2000pF,±1%,100V	
C 24	Cer,(CC924CH1H391J)	390pF,±5%,50V	
C 25	Cer,(CC45CH1H050CY)	5pF,±0.25pF,50V	
C 26	Cer,(CC924CH1H271J)	270pF,±5%,50V	
C 27	Cer,(CC924CH1H331J)	330pF,±5%,50V	
C 28	Cer,(CC924CH1H331J)	330pF,±5%,50V	
C 29	Cer,(CC924CH1H471J)	470pF,±5%,50V	
C 30	Cer,(CC45CH1H050CY)	5pF,±0.25pF,50V	
C 31	Cer,(CC45CH1H050CY)	5pF,±0.25pF,50V	
C 32	Cer,(CC45CH1H470JY)	47pF,±5%,50V	
C 33	Cer,(CC45CH1H101JY)	100pF,±5%,50V	
C 34	Cer,(CC45CH1H050CY)	5pF,±0.25pF,50V	
C 35	Not assigned		
C 36	Elect,(CE04C1C331A)	330μF,±20%,16V	
C 37	Elect,(CE04C1C331A)	330μF,±20%,16V	
C 38	Elect,(CE04C1C331A)	330μF,±20%,16V	
C 39	Elect,(CE04C1C331A)	330μF,±20%,16V	
C 40	Elect,(CE04C1H2R2A)	2.2μF,±20%,50V	
C 41	Elect,(CE04C1E470A)	47μF,±20%,25V	
C 42	Elect,(CE04C1E470A)	47μF,±20%,25V	
C 43	Elect,(CE04C1C331A)	330μF,±20%,16V	
C 44	Elect,(CE04C1C331A)	330μF,±20%,16V	
C 45	Elect,(CE04C1C331A)	330μF,±20%,16V	
C 46	Not assigned		
C 47	Not assigned		

( ): Manufacturer's part number
* : Selected at factory

44W88388 | 1/7

Parts List: A4 JITTER MODULATION (TRANSMITTER) **5**

CKT REF	DESCRIPTION	RATING	NOTE
C 48	Not assigned		
C 49	Not assigned		
C 50	Plast,(ECQ-V1H684JW)	0.68μF,±5%,50V	
C 51 to C 72	Cer,(CK924F1H104Z)	0.1μF,+80/-20%,50V	
C 73	Not assigned		
C 74 to C 89	Cer,(CK924F1H104Z)	0.1μF,+80/-20%,50V	
C 90	Not assigned		
C 91	Not assigned		
C 92	Not assigned		
C 93	Not assigned		
C 94 to C104	Cer,(CK924F1H104Z)	0.1μF,+80/-20%,50V	
C105	Not assigned		
C106	Not assigned		
C107	Not assigned		
C108	Cer,(CK924F1H104Z)	0.1μF,+80/-20%,50V	
C109	Cer,(CK924F1H104Z)	0.1μF,+80/-20%,50V	
C110	Cer,(CK924F1H104Z)	0.1μF,+80/-20%,50V	
C111	Cer,(CK924F1H104Z)	0.1μF,+80/-20%,50V	
C112	Cer,(CC45CH1H100DY)	10pF,±0.5%,50V	
C113	Cer,(CC45CH1H050CY)	5pF,±0.25pF,50V	
C114	Cer,(CK924F1H104Z)	0.1μF,+80/-20%,50V	
C115	Cer,(CK924F1H104Z)	0.1μF,+80/-20%,50V	
C116	Elect,(CE04C1C331A)	330μF,±20%,16V	
C117	Elect,(CE04C1C331A)	330μF,±20%,16V	
C118	Cer,(CC45CH1H101JY)	100pF,±5%,50V	
J 1	Plug,(CNF23-26D-AA10S)		
J 2	Cable,(CNF23-16D-AA50S)		
J 3	Plug,(DF1-2P2.5DSA)	2pins	
J 4	Not assigned		
J 5	Jack,(DF1-5S2.5R24)		
J 6	Plug,(DF1-2P2.5DSA)		
J 7	Plug,(DF1-2P2.5DSA)		
J 8	Plug,(DF1-2P2.5DSA)		
K 1	Not assigned		
K 2	Relay,(SV-5)		
K 3	Relay,(SV-5)		
K 4	Relay,(SV-5)		
K 5	Relay,(SV-5)		

( ): Manufacturer's part number
* : Selected at factory

44W88388 2/7

Parts List: A4 JITTER MODULATION (TRANSMITTER) **5**

CKT REF	DESCRIPTION	RATING	NOTE
K 6	Relay,(SV-5)		
L 1	Coil,(LF8-121K)	120μH,±10%	
L 2	Coil,(LF8-121K)	120μH,±10%	
L 3	Coil,(LF8-560K)	56μH,±10%	
L 4	Coil,(LF8-681K)	680μH,±10%	
L 5	Coil,(LF8-681K)	680μH,±10%	
L 6	Coil,(LF8-331K)	330μH,±10%	
L 7	Coil,(LH1-102K)	1.0mH,±10%	
L 8	Coil,(LH1-102K)	1.0mH,±10%	
L 9	Coil,(LF8-561K)	560μH,±10%	
L 10	Coil,(LH1-222K)	2.2mH,±10%	
L 11	Coil,(LH1-222K)	2.2mH,±10%	
L 12	Coil,(LH1-102K)	1.0mH,±10%	
L 13	Coil,(LF8-121K)	120μH,±10%	
L 14	Coil,(LF8-121K)	120μH,±10%	
L 15	Coil,(LF8-560K)	56μH,±10%	
L 16	Coil,(LF8-681K)	680μH,±10%	
L 17	Coil,(LF8-681K)	680μH,±10%	
L 18	Coil,(LF8-331K)	330μH,±10%	
L 19	Coil,(LH1-102K)	1.0mH,±10%	
L 20	Coil,(LH1-102K)	1.0mH,±10%	
L 21	Coil,(LF8-561K)	560μH,±10%	
L 22	Coil,(LH1-222K)	2200μH,±10%	
L 23	Coil,(LH1-222K)	2200μH,±10%	
L 24	Coil,(LH1-102K)	1.0mH,±10%	
L 25	Coil,(10K13M-65)	0.31μH	
L 26	Coil,(339T20197E)	15μH,±3%	
L 27	Coil,(339T20198D)	56μH,±3%	
L 28	Coil,(339T20199C)	220μH,±3%	
Q 1	Di,(1S953)		
Q 2	Di,breakdown,(RD3.9E)	3.7 to 4.16V,500mW	
Q 3	Di,vari-cap,(FC52M)		
Q 4	Di,vari-cap,(FC52M)		
Q 5	Di,vari-cap,(FC52M)		
Q 6	Di,vari-cap,(FC52M)		
Q 7	Di,vari-cap,(FC52M)		
Q 8	Di,vari-cap,(FC52M)		
Q 9	Di,vari-cap,(FC52M)		
Q 10	Di,breakdown,(1SZ52)	5.9 to 6.5V,250mW	
Q 11	Tr,(2SA836)		
Q 12	Tr,(2SA836)		
Q 13	Tr,(2SA836)		
Q 14	Tr,(2SA836)		

( ): Manufacturer's part number
* : Selected at factory

44W88388 3/7

Parts List: A4 JITTER MODULATION (TRANSMITTER) **5**

CKT REF	DESCRIPTION	RATING	NOTE
Q 15	Tr,(2SC1907)		
Q 16	Tr,(2SC1907)		
Q 17	IC,(NJU201AD)		
Q 18	IC,(HA3-2525-5)		
Q 19	IC,(NJU201AD)		
Q 20	IC,(HA3-2525-5)		
Q 21	IC,(μPC151C)		
Q 22	IC,(μPC271C)		
Q 23	IC,(μPC16305H)		
Q 24	IC,(HA3-2525-5)		
Q 25	Di,vari-cap,(FC52M)		
Q 26	Not assigned		
Q 27	Not assigned		
Q 28	Not assigned		
Q 29	Not assigned		
Q 30	IC,(74LS86)		
Q 31	IC,(74LS191)		
Q 32	IC,(74LS123)		
Q 33	IC,(74LS20)		
Q 34	IC,(74LS191)		
Q 35	IC,(74LS74A)		
Q 36	IC,(74LS08)		
Q 37	IC,(74LS14)		
Q 38	IC,(74LS191)		
Q 39	IC,(74LS04)		
Q 40	Not assigned		
Q 41	IC,(74LS74A)		
Q 42	IC,(TD62003P)		
Q 43	IC,(HD10124)		
Q 44	IC,(HA17012PC)		
Q 45	IC,(MC1648P)		
Q 46	IC,(MC1648P)		
Q 47	IC,(MC1648P)		
Q 48	IC,(MC1648P)		
Q 49	Not assigned		
Q 50	Not assigned		
Q 51	IC,(MC10115L)		
Q 52	IC,(HD10102)		
Q 53	IC,(μPC177C)		
Q 54	IC,(HD10101)		
Q 55	IC,(HD10101)		
Q 56	IC,(74F160APC)		
Q 57	IC,(HD10124)		
Q 58	IC,(MC12040L)		
Q 59	Not assigned		
Q 60	Not assigned		
Q 61	IC,(HD10124)		

( ): Manufacturer's part number
* : Selected at factory

44W88388 4/7

Parts List: A4 JITTER MODULATION (TRANSMITTER) **5**

CKT REF	DESCRIPTION	RATING	NOTE
Q 62	IC,(HD10125)		
Q 63	IC,(74S04)		
Q 64	IC,(74F151PC)		
Q 65	IC,(74F161APC)		
Q 66	IC,(74F151PC)		
Q 67	IC,(74F160APC)		
Q 68	IC,(74F00PC)		
Q 69	Not assigned		
Q 70	Not assigned		
Q 71	IC,(74F161APC)		
Q 72	IC,(74F374PC)		
Q 73	IC,(74F374PC)		
Q 74	IC,(74F374PC)		
Q 75	IC,(74F374PC)		
Q 76	IC,(74F74PC)		
Q 77	IC,(74F00PC)		
Q 78	IC,(74F164APC)		
Q 79	Not assigned		
Q 80	Not assigned		
Q 81	IC,(74F164APC)		
Q 82	IC,(74F175PC)		
Q 83	IC,(74S04)		
Q 84	IC,(74S04)		
R 1	CF,(ARD25T102J)	1kΩ,±5%,1/4W	
R 2	CF,(ARD25T102J)	1kΩ,±5%,1/4W	
R 3	CF,(ARD25T471J)	470Ω,±5%,1/4W	
R 4	CF,(ARD25T100J)	10Ω,±5%,1/4W	
R 5	CF,(ARD25T681J)	680Ω,±5%,1/4W	
R 6	CF,(ARD25T681J)	680Ω,±5%,1/4W	
R 7	CF,(ARD25T102J)	1kΩ,±5%,1/4W	
R 8	CF,(ARD25T102J)	1kΩ,±5%,1/4W	
R 9	CF,(ARD25T102J)	1kΩ,±5%,1/4W	
R 10	CF,(ARD25T102J)	1kΩ,±5%,1/4W	
R 11	CF,(ARD25T102J)	1kΩ,±5%,1/4W	
R 12	CF,(ARD25T221J)	220Ω,±5%,1/4W	
R 13	CF,(ARD25T223J)	22kΩ,±5%,1/4W	
R 14	CF,(ARD25T223J)	22kΩ,±5%,1/4W	
R 15	CF,(ARD25T223J)	22kΩ,±5%,1/4W	
R 16	CF,(ARD25T223J)	22kΩ,±5%,1/4W	
R 17	CF,(ARD25T471J)	470Ω,±5%,1/4W	
R 18	CF,(ARD25T471J)	470Ω,±5%,1/4W	
R 19	CF,(ARD25T471J)	470Ω,±5%,1/4W	
R 20	CF,(ARD25T471J)	470Ω,±5%,1/4W	
R 21	CF,(ARD25T102J)	1kΩ,±5%,1/4W	
R 22	CF,(ARD25T332J)	3.3kΩ,±5%,1/4W	

( ): Manufacturer's part number
* : Selected at factory

44W88388 5/7

Parts List: A4 JITTER MODULATION (TRANSMITTER) 5

CKT REF	DESCRIPTION	RATING	NOTE
R 23	CF,(ARD25T821J)	820Ω,±5%,1/4W	
R 24	CF,(ARD25T272J)	2.7kΩ,±5%,1/4W	
R 25	CF,(ARD25T821J)	820Ω,±5%,1/4W	
R 26	CF,(ARD25T272J)	2.7kΩ,±5%,1/4W	
R 27	CF,(ARD25T821J)	820Ω,±5%,1/4W	
R 28	CF,(ARD25T272J)	2.7kΩ,±5%,1/4W	
R 29	CF,(ARD25T821J)	820Ω,±5%,1/4W	
R 30	CF,(ARD25T272J)	2.7kΩ,±5%,1/4W	
R 31	Not assigned		
R 32	MF,(RN14K2E9090D)	909Ω,±0.5%,1/4W	
R 33	Not assigned		
R 34	CF,(ARD25T222J)	2.2kΩ,±5%,1/4W	
R 35	CF,(ARD25T222J)	2.2kΩ,±5%,1/4W	
R 36	CF,(ARD25T223J)	22kΩ,±5%,1/4W	
R 37	CF,(ARD25T333J)	33kΩ,±5%,1/4W	
R 38	CF,(ARD25T183J)	18kΩ,±5%,1/4W	
R 39	CF,(ARD25T681J)	680Ω,±5%,1/4W	
R 40	CF,(ARD25T103J)	10kΩ,±5%,1/4W	
R 41	CF,(ARD25T331J)	330Ω,±5%,1/4W	
R 42	CF,(ARD25T750J)	75Ω,±5%,1/4W	
R 43	MF,(RN14K2E1001D)	1.00kΩ,±0.5%,1/4W	
R 44	MF,(RN14K2E1001D)	1.00kΩ,±0.5%,1/4W	
R 45	MF,(RN14K2E1001D)	1.00kΩ,±0.5%,1/4W	
R 46	MF,(RN14K2E1001D)	1.00kΩ,±0.5%,1/4W	
R 47	Not assigned		
R 48	MF,(RN14K2E1001D)	1.00kΩ,±0.5%,1/4W	
R 49	MF,(RN14K2E2491D)	2.49kΩ,±0.5%,1/4W	
R 50	MF,(RN14K2E2741D)	2.74kΩ,±0.5%,1/4W	
R 51	MF,(RN14K2E3011D)	3.01kΩ,±0.5%,1/4W	
R 52	MF,(RN14K2E3010D)	301Ω,±0.5%,1/4W	
R 53	MF,(RN14K2E3010D)	301Ω,±0.5%,1/4W	
R 54	Not assigned		
R 55	Not assigned		
R 56	Not assigned		
R 57	Not assigned		
R 58	Not assigned		
R 59	MF,(RN14K2H330J)	33Ω,±5%,1/2W	
R 60	CM,var,(RJ-6P 500Ω)	500Ω,1/2W	
R 61	CM,var,(RJ-6P 500Ω)	500Ω,1/2W	
R 62	CM,var,(RJ-6P 500Ω)	500Ω,1/2W	
R 63	CM,var,(RJ-6P 500Ω)	500Ω,1/2W	
R 64	CM,var,(RJ-6P 200Ω)	200Ω,1/2W	
R 65	CM,var,(RJ-6P 500Ω)	500Ω,1/2W	
R 66	CM,var,(RJ-6P 200Ω)	200Ω,1/2W	
R 67	CM,var,(RJ-6P 200Ω)	200Ω,1/2W	
R 68	Not assigned		
R 69	Not assigned		

( ): Manufacturer's part number
* : Selected at factory

44W88388 6/7

Parts List: A4 JITTER MODULATION (TRANSMITTER) 5

CKT REF	DESCRIPTION	RATING	NOTE
R 70	SIP type,(RRS-4-471JA)	470Ω x 4,±5%,1/8W	
R 71	SIP type,(RRS-8-681JA)	680Ω x 8,±5%,1/8W	
R 72	SIP type,(RRS-6-681JA)	680Ω x 6,±5%,1/8W	
R 73	CF,(ARD25T681J)	680Ω,±5%,1/4W	
R 74	CF,(ARD25T681J)	680Ω,±5%,1/4W	
R 75	CF,(ARD25T681J)	680Ω,±5%,1/4W	
R 76	CF,(ARD25T471J)	470Ω,±5%,1/4W	
R 77	MF,(RN14K2E8660D)	866Ω,±0.5%,1/4W	
R 78	CM,var,(RJ-6P 200Ω)	200Ω,1/2W	
R 79	MF,(RN14K2E1431D)	1.43kΩ,±0.5%,1/4W	
R 80	CM,var,(RJ-6P 200Ω)	200Ω,1/2W	
R 81	MF,(RN14K2E1001D)	1.0kΩ,±0.5%,1/4W	
R 82	CF,(ARD25T471J)	470Ω,±5%,1/4W	
R 83	MF,(RN14K2E69R8D)	69.8Ω,±0.5%,1/4W	
R 84	MF,(RN14K2E1210D)	121Ω,±0.5%,1/4W	
R 85	MF,(RN14K2E32R4D)	32.4Ω,±0.5%,1/4W	
R 86	MF,(RN14K2E * D)	10.0 to 51.1Ω,±5%, 1/4W	*
R 87	CF,(ARD25T102J)	1kΩ,±5%,1/4W	
R 88	MF,(RN14K2E7500D)	750Ω,±0.5%,1/4W	
R 89	MF,(RN14K2E5760D)	576Ω,±0.5%,1/4W	
R 90	MF,(RN14K2E7500D)	750Ω,±0.5%,1/4W	
R 91	MF,(RN14K2E6980D)	698Ω,±0.5%,1/4W	
R 92	MF,(RN14K2E2211D)	2.21kΩ,±0.5%,1/4W	
R 93	MF,(RN14K2E2491D)	2.49kΩ,±0.5%,1/4W	
R 94	MF,(RN14K2E2741D)	2.74kΩ,±0.5%,1/4W	
R 95	MF,(RN14K2E2611D)	2.61kΩ,±0.5%,1/4W	
R 96	CM,var,(RJ-6P 500Ω)	500Ω,1/2W	
R 97	CF,(ARD25T103J)	10kΩ,±5%,1/4W	

( ): Manufacturer's part number
* : Selected at factory

44W88388 7/7

Parts List: A5 MODULATION SIGNAL GENERATOR (TRANSMITTER) 6

CKT REF	DESCRIPTION	RATING	NOTE
C 1	Elect,(CE04C1C331A)	330μF,±20%,16V	
C 2	Elect,(CE04C1C331A)	330μF,±20%,16V	
C 3	Elect,(CE04C1C331A)	330μF,±20%,16V	
C 4	Elect,(CE04C1C331A)	330μF,±20%,16V	
C 5	Cer,(CK924F1H104Z)	0.1μF,+80/-20%,50V	
C 6	Cer,(CK924F1H104Z)	0.1μF,+80/-20%,50V	
C 7	Cer,(CK924F1H104Z)	0.1μF,+80/-20%,50V	
C 8	Cer,(CK924F1H104Z)	0.1μF,+80/-20%,50V	
C 9	Cer,(CC45CH1H100DY)	10pF,±0.25%,50V	
C 10	Cer,(CK924F1H104Z)	0.1μF,+80/-20%,50V	
C 11	Cer,(CK924F1H104Z)	0.1μF,+80/-20%,50V	
C 12	Cer,(CK924F1H104Z)	0.1μF,+80/-20%,50V	
C 13	Cer,(CK924F1H104Z)	0.1μF,+80/-20%,50V	
C 14	Cer,(CK924F1H104Z)	0.1μF,+80/-20%,50V	
C 15	Cer,(CK924F1H104Z)	0.1μF,+80/-20%,50V	
C 16	Cer,(CK924F1H104Z)	0.1μF,+80/-20%,50V	
C 17	Cer,(CK924F1H104Z)	0.1μF,+80/-20%,50V	
C 18	Cer,(CC924CH1H102J)	1000pF,±5%,50V	
C 19	Cer,(CC924CH1H221J)	220pF,±5%,50V	
C 20	Cer,(CC924CH1H102J)	1000pF,±5%,50V	
C 21	Cer,(CC924CH1H221J)	220pF,±5%,50V	
C 22	Cer,(CK924F1H104Z)	0.1μF,+80/-20%,50V	
C 23	Cer,(CK924F1H104Z)	0.1μF,+80/-20%,50V	
C 24	Cer,(CK924F1H104Z)	0.1μF,+80/-20%,50V	
C 25	Cer,(CK924F1H104Z)	0.1μF,+80/-20%,50V	
C 26	Cer,(CK924F1H104Z)	0.1μF,+80/-20%,50V	
C 27	Cer,(CK924F1H104Z)	0.1μF,+80/-20%,50V	
C 28	Plast,(ECQ-P1123FZ)	12000pF,±1%,100V	
C 29	Cer,(CK924F1H104Z)	0.1μF,+80/-20%,50V	
C 30	Cer,(CK924F1H104Z)	0.1μF,+80/-20%,50V	
C 31	Cer,(CK924F1H104Z)	0.1μF,+80/-20%,50V	
C 32	Cer,(CK924F1H104Z)	0.1μF,+80/-20%,50V	
C 33	Cer,(CC45CH1H101JY)	100pF,±5%,50V	
C 34	Plast,(ECQ-P1473FZ)	47000pF,±1%,100V	
C 35	Plast,(ECQ-P1123FZ)	12000pF,±1%,100V	
C 36	Plast,(ECQ-P1473FZ)	47000pF,±1%,100V	
C 37	Cer,(CK924F1H104Z)	0.1μF,+80/-20%,50V	
J 1	Plug,(CNF3-16P-2.54DSA)	16pins	
J 2	Plug,(DF1-2P2.5DSA)	2pins	
L 1	Coil,(LF8-221K)	220μH,±10%	
L 2	Coil,(LF8-391K)	390μH,±10%	
L 3	Coil,(LF8-221K)	220μH,±10%	
L 4	Coil,(LH1-123K)	12mH,±10%	

( ): Manufacturer's part number
* : Selected at factory

44W88408 1/3

Parts List: A5 MODULATION SIGNAL GENERATOR (TRANSMITTER) 6

CKT REF	DESCRIPTION	RATING	NOTE
L 5	Coil,(LH1-183K)	18mH,±10%	
L 6	Coil,(LH1-123K)	12mH,±10%	
Q 1	IC,(NJM5534D)		
Q 2	IC,(NJM5534D)		
Q 3	IC,(AD7533LN)		
Q 4	IC,(74LS365A)		
Q 5	IC,(74HC74)		
Q 6	IC,(74HC74)		
Q 7	IC,(74HC595)		
Q 8	IC,(74HC273)		
Q 9	IC,(LT1016CN8)		
Q 10	IC,(74HC595)		
Q 11	IC,(74HC283)		
Q 12	IC,(74CH273)		
Q 13	IC,(74LS00)		
Q 14	IC,(74LS390)		
Q 15	IC,(NJM5534D)		
Q 16	IC,(74HC595)		
Q 17	IC,(74HC283)		
Q 18	IC,(EPROM32KX8-20C)		
Q 19	IC,(NJM5534D)		
Q 20	IC,(NJU201AD)		
Q 21	IC,(74HC283)		
Q 22	IC,(74HC283)		
Q 23	IC,(74HC273)		
Q 24	IC,(74LS273)		
Q 25	IC,(μPC624C)		
Q 26	Di,breakdown,(1SZ52)	5.9 to 6.5V,250mW	
R 1	CF,(ARD25T103J)	10kΩ,±5%,1/4W	
R 2	MF,(RN14K2E4751D)	4.75kΩ,±0.5%,1/4W	
R 3	CM,var,(RJ-6P 2KΩ)	2kΩ,1/2W	
R 4	MF,(RN14K2E1001D)	1.0kΩ,±0.5%,1/4W	
R 5	MF,(RN14K2E1001D)	1.0kΩ,±0.5%,1/4W	
R 6	CM,var,(RJ-6P 100Ω)	100Ω,1/2W	
R 7	MF,(RN14K2E6040D)	604Ω,±0.5%,1/4W	
R 8	Not assigned		
R 9	MF,(RN14K2E6040D)	604Ω,±0.5%,1/4W	
R 10	MF,(RN14K2E5110D)	511Ω,±0.5%,1/4W	
R 11	MF,(RN14K2E5110D)	511Ω,±0.5%,1/4W	
R 12	MF,(RN14K2E6040D)	604Ω,±0.5%,1/4W	
R 13	MF,(RN14K2E3011D)	3.01kΩ,±0.5%,1/4W	
R 14	MF,(RN14K2E3011D)	3.01kΩ,±0.5%,1/4W	
R 15	CF,(ARD25T681J)	680Ω,±5%,1/4W	

( ): Manufacturer's part number
* : Selected at factory

M-2

44W88408 2/3

Parts List: A5 MODULATION SIGNAL GENERATOR (TRANSMITTER) **6**

CKT REF	DESCRIPTION	RATING	NOTE
R 16	SIP type,(RRS-6-103JA)	10kΩ x 6,±5%,1/8W	
R 17	Not assigned		
R 18	Not assigned		
R 19	Not assigned		
R 20	MF,(RN14K2E1502D)	15.0kΩ,±0.5%,1/4W	
Z 1	XTAL OSC,(TD308A)	3.277MHz	

( ): Manufacturer's part number
* : Selected at factory

44W88408 3/3

Parts List: A6 T-SWITCH (TRANSMITTER) **7**

CKT REF	DESCRIPTION	RATING	NOTE
J 1	Plug,(CNF3-16P-2.54DSA)	16pins	
J 2	Plug,(DF1-8P2.5DSA)	8pins	
S 1	Switch,(SLEP223D-F)		
S 2	Switch,(SLEP222D-G)		
S 3	Switch,(SLEP223D-F)		
S 4	Not assigned		
S 5	Not assigned		
S 6	Switch,(DIP-A(8))		
S 7	Switch,(DISS2A)		

( ): Manufacturer's part number
* : Selected at factory

44W90993 1/1

Parts List : A7 (Option 41) GP-IB **8**

CKT REF	DESCRIPTION	RATING	NOTE
C 1	Elect,(CE02C1A470)	47μF,±20%,10V	
C 2	Cer,(CK924F1H104Z)	0.1μF,+80/-20%,50V	
C 3	Cer,(CK924F1H104Z)	0.1μF,+80/-20%,50V	
C 4	Cer,(CK924F1H104Z)	0.1μF,+80/-20%,50V	
C 5	Cer,(CK924F1H104Z)	0.1μF,+80/-20%,50V	
C 6	Cer,(CK924F1H104Z)	0.1μF,+80/-20%,50V	
C 7	Cer,(CK924F1H104Z)	0.1μF,+80/-20%,50V	
C 8	Cer,(CK924F1H104Z)	0.1μF,+80/-20%,50V	
J 1	Pattern		
J 2	Connector, (57LE-20240-27CO-D35H)		
Q 1	IC,(75160A)		
Q 2	IC,(75162A)		
Q 3	IC,(μPD7210C)		
Q 4	IC,(74LS00)		
Q 5	IC,(74LS367A)		
Q 6	IC,(74LS240)		
Q 7	IC,(74LS74A)		
Q 8	IC,(74LS32)		
Q 9	IC,(74LS139)		
R 1	Single in-line array, (IHR-8-103JA)	10kΩ x 8,1/8W	
S 1	Dip,(BP-8)		

( ): Manufacturer's part number
* : Selected at factory

44W83046 1/1

Parts List : A8 (Option 43) RS-232C **9**

CKT REF	DESCRIPTION	RATING	NOTE
C 1	Elect,(CE02C1A470)	47μF,±20%,10V	
C 2	Elect,(CE02C1C330)	33μF,±20%,16V	
C 3	Elect,(CE02C1C330)	33μF,±20%,16V	
C 4	Cer,(CC924CH1H151J)	150pF,±5%,50V	
C 5	Cer,(CK924F1H104Z)	0.1μF,+80/-20%,50V	
C 6	Cer,(CK924F1H104Z)	0.1μF,+80/-20%,50V	
C 7	Cer,(CK924F1H104Z)	0.1μF,+80/-20%,50V	
C 8	Cer,(CK924F1H104Z)	0.1μF,+80/-20%,50V	
C 9	Cer,(CK924F1H104Z)	0.1μF,+80/-20%,50V	
C10	Cer,(CK924F1H104Z)	0.1μF,+80/-20%,50V	
C11	Cer,(CK924F1H104Z)	0.1μF,+80/-20%,50V	
C12	Cer,(CK924F1H104Z)	0.1μF,+80/-20%,50V	
C13	Cer,(CK924F1H104Z)	0.1μF,+80/-20%,50V	
J 1	Pattern		
J 2	Connector, (DB-25SA-J4)		
Q 1	IC,(SN75189AN)		
Q 2	IC,(74LS240)		
Q 3	IC,(SN75188N)		
Q 4	IC,(μPD8251AFC)		
Q 5	IC,(74LS04)		
Q 6	IC,(74LS367A)		
Q 7	IC,(COM8146)		
Q 8	IC,(74LS139)		
R 1	Single in-line array, (IHR-8-103JA)	10kΩ x 8,1/8W	
R 2	Single in-line array, (IHR-4-103JA)	10kΩ x 4,1/8W	
S 1	Dip,(S-2031)		
S 2	Dip,(B-8A)		
X 1	XTAL OSC,(NX-5068)	5.0688MHz	

( ): Manufacturer's part number
* : Selected at factory

44W83047 1/1

Parts List: DIGITAL TRANSMISSION ANALYZEP ME3401A RECEIVER **10**

CKT REF	DESCRIPTION	RATING	NOTE
A 1	ERROR DET(422U13838)		44W88390
A 2	R-CONTROL(422U14527)		44W91570
A 3	R-DISPLAY(422U13842)		44W88392
A 4	R-SWITCH(442U88382)		44W88394
A 5	JITTER MEASUREMENT (422U13911)		44W88395 OPT02
A 6	GP-IB(442U83054)		44W83046 OPT42
A 7	RS-232C(442U83056)		44W83047 OPT44
A 8	PRINTER		44W85802
A 9	DS-1 OUTPUT(442U95076)		OPT11 44W95156 OPT 03
G 1	Fan,(PBK-08A12LZ)		
J 1	Jack,(DF1-15S2.5R24)		
J 2	Jack,(DF1-2S2.5R24)		
J 3	Jack,(DF1-2S2.5R24)		
J 4	Jack,(DF1-2S2.5R24)		
J 5	Jack,(U-SB1003)		
J 6	Jack,(DF1-8S2.5R24)		
J 7	Cable, (HIF3BA5B-34DAA26S)		
J 8	Terminal,(44E87532)		
J 9	Terminal,(ML-9DE(2P))		
J 10	Jack,(DF1-2S2.5R24)		
J 11	Receptacle, (BNC-R-101-NI)		
J 12	Receptacle, (BNC-R-101-NI)		
J 13	Receptacle, (BNC-R-101-NI)		
J 14	Receptacle, (BNC-R-101-NI)		
J 15	Receptacle, (BNC-R-101-NI)		
J 16	Receptacle, (BNC-R-101-NI)		
J 17	Receptacle, (BNC-R-101-NI)		
J 18	Receptacle, (BNC-R-101-NI)		
J 19	Jack,(DF1-2S2.5R24)		
J 20	Cable,(CNF3-20D-AA030S)		
J 21	Inlet,(NC-165)		

( ): Manufacturer's part number
* : Selected at factory

Parts List: DIGITAL TRANSMISSION ANALYZER ME3401A RECEIVER **10**

CKT REF	DESCRIPTION	RATING	NOTE
J 22	Jack,(DF1-10S2.5R24)		
J 23	Jack,(DF1-10S2.4R24)		OPT 03
J 24	Jack,(DF1-3S2.4R24)		OPT 03
J 25	Jack,(DF1-2S2.5R24)		OPT 03
J 26	Jack,(44J84152)		OPT 03
S 1	Switch,(SDDUA3105A)		OPT 03
S 2	Switch,(8E3011)		
S 3	Switch,(SLBL222C-B)		
T 1	Power,(44T88343)	123VA	OPT 03
Z 1	Line filter, (MBW-1202-33)		

( ): Manufacturer's part number
* : Selected at factory

Parts List: A2 R-CONTROL (RECEIVER) **11**

CKT REF	DESCRIPTION	RATING	NOTE
B 1	Buzzer,(KMB-06)		
C 1	Elect,(SME80LISN-1000050D)	10000μF,±20%,80V	
C 2	Elect,(CE04C1J100A)	10μF,±20%,63V	
C 3	Elect,(CE04C1V221A)	220μF,±20%,35V	
C 4	Elect,(CE04C1E470A)	47μF,±20%,25V	
C 5	Elect,(CE04C1V221A)	220μF,±20%,35V	
C 6	Elect,(SXE35VB-680 ø12.5 x 25)	680μF,±20%,35V	
C 7	Elect,(SXE25VB-1000 ø12.5 x 25)	1000μF,±20%,25V	
C 8	Elect,(SXE25VB-1000 ø12.5 x 25)	1000μF,±20%,25V	
C 9	Elect,(SXE16VB-1500 ø12.5 x 25)	1500μF,±20%,16V	
C 10	Elect,(SXE16VB-1500 ø12.5 x 25)	1500μF,±20%,16V	
C 11	Elect,(SXE16VB-1500 ø12.5 x 25)	1500μF,±20%,16V	
C 12	Elect,(SXE50VB-2200 ø18 x 40)	2200μF,±20%,50V	
C 13	Elect,(CE04C1V102A)	1000μF,±20%,35V	
C 14	Elect,(CE04C1E221A)	220μF,±20%,25V	
C 15	Elect,(CE04C1J470A)	47μF,±20%,63V	
C 16	Plast,(ECQ-P1102F2)	1000pF,±1%,100V	
C 17	Cer,(CC924CH1H102J)	1000pF,±5%,50V	
C 18	Cer,(CK924F1H104Z)	0.1μF,+80/-20%,50V	
C 19	Cer,(CK924F1H104Z)	0.1μF,+80/-20%,50V	
C 20	Elect,(CE04C1C331A)	330μF,±20%,16V	
C 21	Elect,(CE04C1C331A)	330μF,±20%,16V	
C 22	Cer,(CK924F1H104Z)	0.1μF,+80/-20%,50V	
C 23	Cer,(CK924F1H104Z)	0.1μF,+80/-20%,50V	
C 24	Cer,(CK924F1H104Z)	0.47μF,±5%,50V	
C 25	Cer,(CK924F1H104Z)	0.1μF,+80/-20%,50V	
C 26	Cer,(CK924F1H104Z)	0.1μF,+80/-20%,50V	
C 27	Not assigned		
C 28	Elect,(CE04C1A221A)	220μF,±20%,10V	
C 29	Elect,(CE04C1A221A)	220μF,±20%,10V	
C 30	Elect,(CE04C1H2R2A)	2.2μF,±20%,50V	
C 31	Elect,(CE04C1H2R2A)	2.2μF,±20%,50V	
C 32	Elect,(CE04C1A221A)	220μF,±20%,10V	
C 33	Elect,(CE04C1A221A)	220μF,±20%,10V	
C 34	Elect,(CE04C1E101A)	100μF,±20%,25V	
C 35	Elect,(CE04C1E101A)	100μF,±20%,25V	
C 36	Elect,(CE04C1V102A)	1000μF,±20%,35V	

( ): Manufacturer's part number
* : Selected at factory

Parts List: A2 R-CONTROL (RECEIVER) **11**

CKT REF	DESCRIPTION	RATING	NOTE
C 37	Elect,(CE04C1A221A)	220μF,±20%,10V	
C 38	Elect,(CE04C1A221A)	220μF,±20%,10V	
C 39	Elect,(CE04C1A221A)	220μF,±20%,10V	
C 40	Cer,(CC924CH1H470J)	47pF,±5%,50V	
C 41	Cer,var,(TZ03R300A)	5.2 to 30pF,100V	
C 42 to C 60	Cer,(CK924F1H104Z)	0.1μF,+80/-20%,50V	
F 1	Fuse, (MF51NN250V6.3ADC01)	6.3A,250V	
F 2	Fuse,(MF51NN250V1ADC01)	1A,250V	
F 3	Fuse,(MF51NN250V1ADC01)	1A,250V	
F 4	Fuse,(MF51NN250V5ADC01)	5A,250V	
F 5	Fuse,(MF51NN250V2ADC01)	2A,250V	
F 6	Fuse, (MF51NN250V1.6ADC01)	1.6A,250V	
J 1	Plug,(DF1-15P2.5DSA)	15pins	
J 2	Plug,(DF1-2P2.5DSA)	2pins	
J 3	Plug,(DF1-2P2.5DSA)	2pins	
J 4	Plug,(CNF3-34P-2.54DSA)	34pins	
J 5	Cable,(CNF23-40D-AA20S)		
J 6	Plug,(CNF3-40P-2.54DSA)	40pins	
J 7	Plug,(CNF3-34P-2.54DSA)	34pins	
J 8	Plug,(CNF3-20P-2.54DSA)	20pins	
K 1	Relay,(OHD3-90M)		
L 1	Coil,(SK-17C-045-650)	650μH	
L 2	Coil,(SK-17C-045-650)	650μH	
L 3	Coil,(SK-17C-045-650)	650μH	
L 4	Coil,(SK-24S-110-100)	100μH	
L 5	Coil,(SK-24S-110-100)	100μH	
L 6	Coil,(SK-21C-070-180)	180μH	
L 7	Coil,(SK-24S-045-3500W)	3.5mH	
M 1	Not assigned		

( ): Manufacturer's part number
* : Selected at factory

Parts List: A2 R-CONTROL (RECEIVER) **11**

CKT REF	DESCRIPTION	RATING	NOTE
Q 1	IC,(μPC494C)		
Q 2	IC,(μPC1251C)		
Q 3	IC,(μPC393C)		
Q 4	Tr,(2SC1826)		
Q 5	Tr,(2SA1154)		
Q 6	Tr,(2SC3220)		
Q 7	Tr,(2SC3220)		
Q 8	Photo coupler,(PC618)		
Q 9	Photo coupler,(PC817)		
Q 10	Not assigned		
Q 11	Rectifier, (D5FB20(4002))		
Q 12	Rectifier,(RB-152-LFB)		
Q 13	Rectifier,(V03G)		
Q 14	Rectifier,(V19E-1)		
Q 15	Rectifier,(V19E-1)		
Q 16	Rectifier,(V19E-1)		
Q 17	Rectifier,(V19E-1)		
Q 18	Rectifier,(V19E-1)		
Q 19	Rectifier,(V19E-1)		
Q 20	Rectifier,(D5LCA20)		
Q 21	Rectifier,(D8LCA20)		
Q 22	Rectifier,(D8LCA20R)		
Q 23	Rectifier,(D10SC4M)		
Q 24	Rectifier,(D10SC4MR)		
Q 25	Rectifier,(D5LCA20)		
Q 26	Not assigned		
Q 27	Not assigned		
Q 28	Di,breakdown,(RD5.1E)	4.8 to 5.37V,500mW	
Q 29	Di,breakdown,(RD13E)	12.11 to 13.66V, 500mW	
Q 30	Di,breakdown,(RD2.7E)	2.5 to 2.93V,500mW	
Q 31	Di,breakdown,(RD2.7E)	2.5 to 2.93V,500mW	
Q 32	Di,(1S955)		
Q 33	Di,(1S955)		
Q 34	Di,(1S953)		
Q 35	IC,(μPC14324H)		
Q 36	IC,(SI-3122V)		
Q 37	IC,(μPC16312H)		
Q 38	Not assigned		
Q 39	Not assigned		
Q 40	Di,(1S953)		
Q 41	Di,(1S953)		
Q 42	Not assigned		
Q 43	Not assigned		
Q 44	Not assigned		
Q 45	IC,(74LS245)		

( ): Manufacturer's part number
* : Selected at factory

44W91570 3/6

Parts List: A2 R-CONTROL (RECEIVER) **11**

CKT REF	DESCRIPTION	RATING	NOTE
Q 46	IC,(μPD8279C-2)		
Q 47	IC,(μPD8279C-2)		
Q 48	IC,(EPROM32KX8-20C)		
Q 49	IC,(EPROM32KX8-20C)		
Q 50	IC,(EPROM32KX8-20C)		
Q 51	IC,(EPROM32KX8-20C)		
Q 52	IC,(HM62256LP-12)		
Q 53	IC,(RP5C15P)		
Q 54	IC,(74LS74A)		
Q 55	IC,(74LS245)		
Q 56	IC,(7437)		
Q 57	IC,(74LS74A)		
Q 58	IC,(LH0080B)		
Q 59	IC,(74LS14)		DILB40P-8J
Q 60	IC,(74LS244)		
Q 61	IC,(74LS244)		
Q 62	Not assigned		
Q 63	IC,(74LS74A)		
Q 64	IC,(74LS139)		
Q 65	IC,(74LS138)		
Q 66	IC,(74LS08)		
Q 67	IC,(TC74HC00P)		
Q 68	IC,(74LS155)		
Q 69	IC,(74LS32)		
Q 70	IC,(MB3771)		
Q 71	IC,(74LS04)		
Q 72	IC,(74LS123)		
Q 73	IC,(μPD8259AC-2)		
Q 74	Not assigned		
Q 75	Not assigned		
Q 76	IC,(74LS245)		
Q 77	IC,(74LS244)		
Q 78	IC,(μPD8255AC-2)		
Q 79	IC,(μPD8255AC-2)		
Q 80	IC,(74LS244)		
Q 81	IC,(74LS244)		
R 1	MF,(RS1FB4.7KΩJ)	4.7kΩ,±5%,1W	
R 2	MF,(RS1FB3.3KΩJ)	3.3kΩ,±5%,1W	
R 3	MF,(RS1FB3.3KΩJ)	3.3kΩ,±5%,1W	
R 4	MF,(RN14K2H101J)	0.1kΩ,±5%,1/2W	
R 5	CF,(ARD25T123J)	12kΩ,±5%,1/4W	
R 6	CF,(ARD25T331J)	330Ω,±5%,1/4W	
R 7	CF,(ARD25T332J)	3.3kΩ,±5%,1/4W	
R 8	CF,(ARD25T681J)	680Ω,±5%,1/4W	
R 9	CF,(ARD25T102J)	1kΩ,±5%,1/4W	

( ): Manufacturer's part number
* : Selected at factory

M-1
44W91570 4/6

Parts List: A2 R-CONTROL (RECEIVER) **11**

CKT REF	DESCRIPTION	RATING	NOTE
R 10	MF,(RN14K2H470J)	47Ω,±5%,1/2W	
R 11	MF,(RN14K2H100J)	10Ω,±5%,1/2W	
R 12	CF,(ARD25T101J)	100Ω,±5%,1/4W	
R 13	MF,(RN14K2H470J)	47Ω,±5%,1/2W	
R 14	MF,(RN14K2H100J)	10Ω,±5%,1/2W	
R 15	CF,(ARD25T101J)	100Ω,±5%,1/4W	
R 16	MF,(RS2FB220ΩJ)	220Ω,±5%,1W	
R 17	CF,(ARD25T122J)	1.2kΩ,±5%,1/4W	
R 18	CF,(ARD25T681J)	680Ω,±5%,1/4W	
R 19	CF,(ARD25T331J)	330Ω,±5%,1/4W	
R 20	CF,(ARD25T103J)	10kΩ,±5%,1/4W	
R 21	CF,(ARD25T221J)	220Ω,±5%,1/4W	
R 22	CF,(ARD25T222J)	2.2kΩ,±5%,1/4W	
R 23	MF,(RN14K2H102J)	1kΩ,±5%,1/2W	
R 24	MF,(RN14K2H102J)	1kΩ,±5%,1/2W	
R 25	MF,(RN14K2H101J)	0.1kΩ,±5%,1/2W	
R 26	MF,(RN14K2H101J)	0.1kΩ,±5%,1/2W	
R 27	Not assigned		
R 28	MF,(RS1FB3.3KΩJ)	3.3kΩ,±5%,1W	
R 29	CF,(ARD25T331J)	330Ω,±5%,1/4W	
R 30	CF,(ARD25T472J)	4.7kΩ,±5%,1/4W	
R 31	CF,(ARD25T222J)	2.2kΩ,±5%,1/4W	
R 32	CF,(ARD25T222J)	2.2kΩ,±5%,1/4W	
R 33	CF,(ARD25T103J)	10kΩ,±5%,1/4W	
R 34	CF,(ARD25T104J)	100kΩ,±5%,1/4W	
R 35	Not assigned		
R 36	Not assigned		
R 37	Not assigned		
R 38	MF,(RS2FB1KΩJ)	1kΩ,±5%,1W	
R 39	MF,(RS2FB1KΩJ)	1kΩ,±5%,1W	
R 40	CM,var,(RJ-6P 500Ω)	500Ω,1/2W	
R 41	Not assigned		
R 42	Not assigned		
R 43	CF,(ARD25T103J)	10kΩ,±5%,1/4W	
R 44	MF,(RS2FB22ΩJ)	22Ω,±5%,2W	
R 45	MF,(RN14K2E2741D)	2.74kΩ,±0.5%,1/4W	
R 46	MF,(RN14K2E1001D)	1kΩ,±0.5%,1/4W	
R 47	CF,(ARD25T151J)	150Ω,±5%,1/4W	
R 48	CF,(ARD25T103J)	10kΩ,±5%,1/4W	
R 49	CF,(ARD25T103J)	10kΩ,±5%,1/4W	
R 50	CF,(ARD25T104J)	100kΩ,±5%,1/4W	
R 51	Not assigned		
R 52	SIP type,(RRS-8-103JA)	10kΩ x 8,±5%,1/8W	
R 53	SIP type,(RRS-8-103JA)	10kΩ x 8,±5%,1/8W	
R 54	SIP type,(RRS-4-103JA)	10kΩ x 4,±5%,1/8W	
R 55	SIP type,(RRS-8-103JA)	10kΩ x 8,±5%,1/8W	
R 56	SIP type,(RRS-4-103JA)	10kΩ x 4,±5%,1/8W	

( ): Manufacturer's part number
* : Selected at factory

M-1
44W91570 5/6

Parts List: A2 R-CONTROL (RECEIVER) **11**

CKT REF	DESCRIPTION	RATING	NOTE
R 57	MF,(RS2FB22ΩJ)	22Ω,±5%,2W	
R 58	CF,(ARD25T103J)	10kΩ,±5%,1/4W	
R 59	CF,(ARD25T221J)	220Ω,±5%,1/4W	
R 60	CF,(ARD25T102J)	1kΩ,±5%,1/4W	
T 1	Trans,(44T75381)		
T 2	Trans,(44T75381)		
T 3	Trans,(439TJ6050)		
X 1	XTAL,(MX-38)	32.768KHz	
Z 1	XTAL OSC,(TD308A)	8MHz	
Z 2	Battery,(BR-AE2SP)		

( ): Manufacturer's part number
* : Selected at factory

44W91570 6/6

Parts List: A1 ERROR DET (RECEIVER) **12**

CKT REF	DESCRIPTION	RATING	NOTE
C 1	Cer,(CK924F1H104Z)	0.1μF,+80/-20%,50V	
C 2	Cer,(CK924F1H104Z)	0.1μF,+80/-20%,50V	
C 3	Cer,(CK924F1H104Z)	0.1μF,+80/-20%,50V	
C 4	Cer,(CK924F1H104Z)	0.1μF,+80/-20%,50V	
C 5	Cer,(CK924F1H104Z)	0.1μF,+80/-20%,50V	
C 6	Not assigned		
C 7 to C 19	Cer,(CK924F1H104Z)	0.1μF,+80/-20%,50V	
C 20	Elect,(CE04C1C331A)	330μF,±20%,16V	
C 21	Cer,(CK924F1H104Z)	0.1μF,+80/-20%,50V	
C 22	Cer,(CK924F1H104Z)	0.1μF,+80/-20%,50V	
C 23	Cer,(CK924F1H104Z)	0.1μF,+80/-20%,50V	
C 24	Cer,(CK924F1H104Z)	0.1μF,+80/-20%,50V	
C 25	Cer,(CK924F1H104Z)	0.1μF,+80/-20%,50V	
C 26	Cer,(RPE113F105Z50)	1μF,+80/-20%,50V	
C 27	Cer,(CK924F1H104Z)	0.1μF,+80/-20%,50V	
C 28	Cer,(CK924F1H104Z)	0.1μF,+80/-20%,50V	
C 29	Cer,(CK924F1H104Z)	0.1μF,+80/-20%,50V	
C 30	Cer,(CK924F1H104Z)	0.1μF,+80/-20%,50V	
C 31	Elect,(CE04C1V330A)	33μF,±20%,35V	
C 32	Cer,(CK924F1H104Z)	0.1μF,+80/-20%,50V	
C 33	Not assigned		
C 34	Not assigned		
C 35	Elect,(CE04C1C331A)	330μF,±20%,16V	
C 36	Cer,(CK924F1H104Z)	0.1μF,+80/-20%,50V	
C 37	Cer,(CK924F1H104Z)	0.1μF,+80/-20%,50V	
C 38	Cer,(CK924F1H104Z)	0.1μF,+80/-20%,50V	
C 39	Cer,(CK924F1H104Z)	0.1μF,+80/-20%,50V	
C 40	Not assigned		
C 41	Cer,(CK924F1H104Z)	0.1μF,+80/-20%,50V	
C 42	Cer,(CK924F1H104Z)	0.1μF,+80/-20%,50V	
C 43	Cer,(CK924F1H104Z)	0.1μF,+80/-20%,50V	
C 44	Cer,(CK924F1H104Z)	0.1μF,+80/-20%,50V	
C 45	Cer,(CK924F1H104Z)	0.1μF,+80/-20%,50V	
C 46	Cer,(CK924F1H104Z)	0.1μF,+80/-20%,50V	
C 47	Cer,(CK924F1H104Z)	0.1μF,+80/-20%,50V	
C 48	Cer,(CK924F1H104Z)	0.1μF,+80/-20%,50V	
C 49	Cer,(CK924F1H104Z)	0.1μF,+80/-20%,50V	
C 50	Cer,(CK924F1H104Z)	0.1μF,+80/-20%,50V	
C 51	Cer,(CC45CH1H200JY)	20pF,±5%,50V	
C 52	Cer,(CK924F1H104Z)	0.1μF,+80/-20%,50V	
C 53	Cer,(CC45CH1H151JY)	150pF,±5%,50V	
C 54	Cer,(CK924F1H104Z)	0.1μF,+80/-20%,50V	
C 55	Cer,(CC924CH1H391JJ)	390pF,±5%,50V	
C 56	Elect,(CE04C1C331A)	330μF,±20%,16V	
C 57	Cer,(CK924F1H104Z)	0.1μF,+80/-20%,50V	

( ): Manufacturer's part number
* : Selected at factory

44W88390 1/13

Parts List: A1 ERROR DET (RECEIVER) **12**

CKT REF	DESCRIPTION	RATING	NOTE
C 58	Cer,(CK924F1H104Z)	0.1μF,+80/-20%,50V	
C 59	Cer,(CK924F1H104Z)	0.1μF,+80/-20%,50V	
C 60	Elect,(CE04C1C331A)	330μF,±20%,16V	
C 61	Cer,(CK924F1H104Z)	0.1μF,+80/-20%,50V	
C 62	Cer,(CK924F1H104Z)	0.1μF,+80/-20%,50V	
C 63	Cer,(RPE113F105Z50)	1μF,+80/-20%,50V	
C 64	Cer,(CK924F1H104Z)	0.1μF,+80/-20%,50V	
C 65	Cer,(RPE113F105Z50)	1μF,+80/-20%,50V	
C 66	Cer,(CK924F1H104Z)	0.1μF,+80/-20%,50V	
C 67	Cer,(RPE113F105Z50)	1μF,+80/-20%,50V	
C 68 to C 78	Cer,(CK924F1H104Z)	0.1μF,+80/-20%,50V	
C 79	Cer,(CC45CK1H0R5CY)	0.5pF,±0.25pF,50V	
C 80	Cer,(CK924F1H104Z)	0.1μF,+80/-20%,50V	
C 81	Not assigned		
C 82 to C 93	Cer,(CK924F1H104Z)	0.1μF,+80/-20%,50V	
C 94	Cer,(CC924CH1H681J)	680pF,±5%,50V	
C 95	Cer,(CK924F1H104Z)	0.1μF,+80/-20%,50V	
C 96	Cer,(CK924F1H104Z)	0.1μF,+80/-20%,50V	
C 97	Cer,(CK924F1H104Z)	0.1μF,+80/-20%,50V	
C 98	Cer,(CK924F1H104Z)	0.1μF,+80/-20%,50V	
C 99	Cer,(CK924F1H104Z)	0.1μF,+80/-20%,50V	
C100	Cer,(CK924F1H104Z)	0.1μF,+80/-20%,50V	
C101	Elect,(CE04C1C331A)	330μF,±20%,16V	
C102	Cer,(CK924F1H104Z)	0.1μF,+80/-20%,50V	
C103	Cer,(CK924F1H104Z)	0.1μF,+80/-20%,50V	
C104	Cer,(CK924F1H104Z)	0.1μF,+80/-20%,50V	
C105	Cer,(CK924F1H104Z)	0.1μF,+80/-20%,50V	
C106	Cer,(CK924F1H104Z)	0.1μF,+80/-20%,50V	
C107	Cer,(CK924F1H104Z)	0.1μF,+80/-20%,50V	
C108	Elect,(CE04C1C331A)	330μF,±20%,16V	
C109	Cer,(CK924F1H104Z)	0.1μF,+80/-20%,50V	
C110	Cer,(CK924F1H104Z)	0.1μF,+80/-20%,50V	
C111	Cer,(CK924F1H104Z)	0.1μF,+80/-20%,50V	
C112	Cer,(CK924F1H104Z)	0.1μF,+80/-20%,50V	
C113	Cer,(CK924F1H104Z)	0.1μF,+80/-20%,50V	
C114	Cer,(CK924F1H104Z)	0.1μF,+80/-20%,50V	
C115	Elect,(CE04C1C331A)	330μF,±20%,16V	
C116	Elect,(CE04C1C331A)	330μF,±20%,16V	
C117	Elect,(CE04C1C331A)	330μF,±20%,16V	
C118	Elect,(CE04C1C331A)	330μF,±20%,16V	
C119	Elect,(CE04C1C331A)	330μF,±20%,16V	
C120	Cer,(CK924F1H104Z)	0.1μF,+80/-20%,50V	
C121	Cer,(CK924F1H104Z)	0.1μF,+80/-20%,50V	

( ): Manufacturer's part number
* : Selected at factory

44W88390 2/13

Parts List: A1 ERROR DET (RECEIVER) **12**

CKT REF	DESCRIPTION	RATING	NOTE
C122	Cer,(CK924F1H104Z)	0.1μF,+80/-20%,50V	
C123	Cer,(CK924F1H104Z)	0.1μF,+80/-20%,50V	
C124	Elect,(CE04C1H100A)	10μF,±20%,50V	
C125	Not assigned	0.1μF,+80/-20%,50V	
C126	Elect,(CE04C1H100A)	10μF,±20%,50V	
C127	Elect,(CE04C1H100A)	10μF,±20%,50V	
C128	Cer,(CK924F1H104Z)	0.1μF,+80/-20%,50V	
C129	Cer,(CC924CH1H331J)	330pF,±5%,50V	
C130	Cer,(CC924CH1H331J)	330pF,±5%,50V	
C131	Cer,(CK924F1H104Z)	0.1μF,+80/-20%,50V	
C132	Cer,(CK924F1H104Z)	0.1μF,+80/-20%,50V	
C133	Elect,(CE04C1H100A)	10μF,±20%,50V	
C134	Elect,(CE04C1H100A)	10μF,±20%,50V	
C135	Elect,(CE04C1H100A)	10μF,±20%,50V	
C136	Elect,(CE04C1H100A)	10μF,±20%,50V	
C137	Cer,(CK924F1H104Z)	0.1μF,+80/-20%,50V	
C138	Cer,(CK924F1H104Z)	0.1μF,+80/-20%,50V	
C139	Elect,(CE04C1E101A)	100μF,±20%,25V	
C140	Elect,(CE04C1E101A)	100μF,±20%,25V	
C141	Elect,(CE04C1E101A)	100μF,±20%,25V	
C142	Cer,(CK924F1H104Z)	0.1μF,+80/-20%,50V	
C143	Not assigned		
C144	Cer,(CC924CH1H471J)	470pF,±5%,50V	
C145	Cer,(CK924F1H104Z)	0.1μF,+80/-20%,50V	
C146	Cer,(CK924F1H104Z)	0.1μF,+80/-20%,50V	
C147	Not assigned		
C148	Not assigned		
C149	Cer,(CK924F1H104Z)	0.1μF,+80/-20%,50V	
C150	Cer,(CK924F1H104Z)	0.1μF,+80/-20%,50V	
C151	Cer,(CK924F1H104Z)	0.1μF,+80/-20%,50V	
C152	Cer,(CK924F1H104Z)	0.1μF,+80/-20%,50V	
C153	Cer,(CC924CH1H470J)	47pF,±5%,50V	
C154	Cer,(CK924F1H104Z)	0.1μF,+80/-20%,50V	
C155	Cer,(CK924F1H104Z)	0.1μF,+80/-20%,50V	
C156	Cer,(CK924F1H104Z)	0.1μF,+80/-20%,50V	
C157	Cer,(CK924F1H104Z)	0.1μF,+80/-20%,50V	
C158	Cer,(CK924F1H104Z)	0.1μF,+80/-20%,50V	
C159	Cer,(CK924F1H104Z)	0.1μF,+80/-20%,50V	
J 1	Plug,(DF1-2P2.5DSA)	2pins	
J 2	Plug,(U-PB1021)		
J 3	Cable,(CNF23-40D-AA20S)		
J 4	Plug,(CNF3-26P-2.54DS)	26pins	
J 5	Receptacle,(BNC-R-NI)		
J 6	Receptacle,(BNC-R-NI)		
J 7	Receptacle,(JJ-022)		

( ): Manufacturer's part number
* : Selected at factory

44W88390 3/13

Parts List: A1 ERROR DET (RECEIVER) **12**

CKT REF	DESCRIPTION	RATING	NOTE
J 8	Receptacle,(BNC-R-NI)		
J 9	Plug,(DF1-8P2.5DSA)	8pins	
J 10	Plug,(DF1-10P2.5DSA)	10pins	
J 11	Connector,(DIC-149-3P)		
J 12	Connector,(DIC-128)		
K 1	Relay,(SV-5)		
K 2	Relay,(SV-5)		
K 3	Relay,(SV-5)		
K 4	Relay,(SV-5)		
L 1	Coil,(SP0408-R47M)	0.47μH,±20%	
L 2	Coil,(SP0408-3R3M)	3.3μH,±20%	
L 3	Coil,(SP0408-4R7M)	4.7μH,±20%	
L 4	Coil,(SP0408-120M)	120μH,±20%	
Q 1	Di,vari-cap,(FC-51M)		
Q 2	Di,vari-cap,(FC-51M)		
Q 3	Di,vari-cap,(FC-51M)		
Q 4	Tr,(2SC1907)		
Q 5	Tr,(2SC1907)		
Q 6	Tr,(2SC1907)		
Q 7	Tr,(2SC1907)		
Q 8	Tr,(2SC1907)		
Q 9	Tr,(2SC1907)		
Q 10	Tr,(2SC1907)		
Q 11	Di,(1S953)		
Q 12	Di,(1S953)		
Q 13	Tr,(2SC1907)		
Q 14	FET,(3SK59)		
Q 15	Tr,(2SC1907)		
Q 16	Tr,(2SC1907)		
Q 17	IC,(μPC151C)		
Q 18	Tr,(2SC2498)		
Q 19	Di,(1S953)		
Q 20	Di,(1S953)		
Q 21	Tr,(2SC1907)		
Q 22	Di,(1S953)		
Q 23	Di,breakdown,(RD6.2E)	5.78 to 6.44V,500mW	
Q 24	Di,(1S953)		
Q 25	Tr,(2SC2498)		
Q 26	Tr,(2SC2498)		
Q 27	IC,(HD10102)		
Q 28	Di,(1S953)		
Q 29	Di,breakdown,(RD6.2E)	5.78 to 6.44V,500mW	

( ): Manufacturer's part number
* : Selected at factory

44W88390 4/13

Parts List: A1 ERROR DET (RECEIVER) **12**

CKT REF	DESCRIPTION	RATING	NOTE
Q 30	Tr,(2SC1907)		
Q 31	Di,(1S953)		
Q 32	Tr,(2SC1907)		
Q 33	Tr,(2SC1907)		
Q 34	Tr,(2SC2498)		
Q 35	Tr,(2SC2498)		
Q 36	IC,(HD10102)		
Q 37	Di,(1S953)		
Q 38	Tr,(2SC1907)		
Q 39	IC,(74LS139)		
Q 40	Not assigned		
Q 41	Not assigned		
Q 42	IC,(74LS38)		
Q 43	Not assigned		
Q 44	IC,(74LS04)		
Q 45	IC,(74LS08)		
Q 46	IC,(74LS290)		
Q 47	IC,(74LS51)		
Q 48	IC,(μPC1656C)		
Q 49	IC,(μPC1656C)		
Q 50	Tr,(2SC1907)		
Q 51	Di,(1S953)		
Q 52	Tr,(2SC2498)		
Q 53	Tr,(2SC2498)		
Q 54	Di,(1S953)		
Q 55	Tr,(2SC2498)		
Q 56	Tr,(2SC2498)		
Q 57	Di,(1S953)		
Q 58	Di,(1S953)		
Q 59	IC,(HD10116)		
Q 60	IC,(HD10111)		
Q 61	IC,(HD10105)		
Q 62	IC,(HD10125)		
Q 63	IC,(MC10H105)		
Q 64	FET,(3SK47K)		
Q 65	IC,(MC10H105)		
Q 66	FET,(3SK47K)		
Q 67	IC,(MC10H105)		
Q 68	FET,(3SK47K)		
Q 69	FET,(3SK47K)		
Q 70	IC,(HD10125)		
Q 71	IC,(HD10124)		
Q 72	IC,(HD10124)		
Q 73	IC,(μPC151C)		
Q 74	Di,breakdown,(RD6.2E)	5.78 to 6.44V,500mW	
Q 75	Di,(1S953)		
Q 76	Tr,(2SC1907)		

( ): Manufacturer's part number
* : Selected at factory

44W88390 5/13

Parts List: A1 ERROR DET (RECEIVER) **12**

CKT REF	DESCRIPTION	RATING	NOTE
Q 77	Tr,(2SC1907)		
Q 78	Tr,(2SA1206)		
Q 79	Tr,(2SA1206)		
Q 80	Not assigned		
Q 81	Tr,(2SA1206)		
Q 82	Di,(1S953)		
Q 83	Di,breakdown,(RD3.6E)	3.4 to 3.845V,500mW	
Q 84	Tr,(2SA1206)		
Q 85	Tr,(2SA1206)		
Q 86	Not assigned		
Q 87	Tr,(2SA1206)		
Q 88	Not assigned		
Q 89	Tr,(2SC1907)		
Q 90	IC,(AB1098SP)		
Q 91	IC,(μPD7011C)		
Q 92	IC,(74S04)		
Q 93	IC,(74F74PC)		
Q 94	IC,(74F02PC)		
Q 95	IC,(74F175PC)		
Q 96	IC,(μPD8255AC-2)		
Q 97	IC,(74LS245)		
Q 98	IC,(74F175PC)		
Q 99	IC,(74F74PC)		
Q100	IC,(74F74PC)		
Q101	IC,(74LS393)		
Q102	IC,(74F00PC)		
Q103	IC,(74F74PC)		
Q104	IC,(74F74PC)		
Q105	IC,(74LS393)		
Q106	IC,(μPD8255AC-2)		
Q107	IC,(74LS244)		
Q108	IC,(74LS123)		
Q109	IC,(74F153PC)		
Q110	IC,(74LS293)		
Q111	IC,(74S00)		
Q112	IC,(74LS157)		
Q113	IC,(74LS02)		
Q114	IC,(74LS244)		
Q115	IC,(74LS123)		
Q116	IC,(74LS123)		
Q117	IC,(74LS00)		
Q118	IC,(74LS153)		
Q119	IC,(74LS123)		
Q120	IC,(μPD8253C-2)		
Q121	IC,(μPD8253C-2)		
Q122	IC,(μPD8253C-2)		
Q123	IC,(μPD8253C-2)		

( ): Manufacturer's part number
* : Selected at factory

44W88390 6/13

Parts List: A1 ERROR DET (RECEIVER) **12**

CKT REF	DESCRIPTION	RATING	NOTE
Q124	IC,(74LS138)		
Q125	IC,(74LS21)		
Q126	IC,(74LS08)		
Q127	IC,(74LS74A)		
Q128	IC,(74LS123)		
Q129	IC,(74LS08)		
Q130	Di,(1S953)		
Q131	Tr,(2SC1907)		
Q132	IC,(74F74)		
R 1	CF,(ARD25T471J)	470Ω,±5%,1/4W	
R 2	CM,var,(RJ-6P 2KΩ)	2kΩ,1/2W	
R 3	CF,(ARD25T333J)	33kΩ,±5%,1/4W	
R 4	CF,(ARD25T222J)	2.2kΩ,±5%,1/4W	
R 5	CF,(ARD25T150J)	15Ω,±5%,1/4W	
R 6	CF,(ARD25T750J)	75Ω,±5%,1/4W	
R 7	CF,(ARD25T271J)	270Ω,±5%,1/4W	
R 8	CF,(ARD25T333J)	33kΩ,±5%,1/4W	
R 9	CF,(ARD25T151J)	150Ω,±5%,1/4W	
R 10	CF,(ARD25T102J)	1kΩ,±5%,1/4W	
R 11	CF,(ARD25T151J)	150Ω,±5%,1/4W	
R 12	CF,(ARD25T103J)	10kΩ,±5%,1/4W	
R 13	CF,(ARD25T103J)	10kΩ,±5%,1/4W	
R 14	CF,(ARD25T221J)	220Ω,±5%,1/4W	
R 15	CF,(ARD25T181J)	180Ω,±5%,1/4W	
R 16	CF,(ARD25T151J)	150Ω,±5%,1/4W	
R 17	CF,(ARD25T472J)	4.7kΩ,±5%,1/4W	
R 18	CF,(ARD25T472J)	4.7kΩ,±5%,1/4W	
R 19	CF,(ARD25T331J)	330Ω,±5%,1/4W	
R 20	CF,(ARD25T151J)	150Ω,±5%,1/4W	
R 21	CF,(ARD25T103J)	10kΩ,±5%,1/4W	
R 22	CF,(ARD25T472J)	4.7kΩ,±5%,1/4W	
R 23	CF,(ARD25T750J)	75Ω,±5%,1/4W	
R 24	CF,(ARD25T271J)	270Ω,±5%,1/4W	
R 25	Not assigned		
R 26	CF,(ARD25T103J)	10kΩ,±5%,1/4W	
R 27	CF,(ARD25T103J)	10kΩ,±5%,1/4W	
R 28	CF,(ARD25T151J)	150Ω,±5%,1/4W	
R 29	CF,(ARD25T561J)	560Ω,±5%,1/4W	
R 30	CF,(ARD25T151J)	150Ω,±5%,1/4W	
R 31	CF,(ARD25T472J)	4.7kΩ,±5%,1/4W	
R 32	CF,(ARD25T181J)	180Ω,±5%,1/4W	
R 33	CF,(ARD25T151J)	150Ω,±5%,1/4W	
R 34	CF,(ARD25T472J)	4.7kΩ,±5%,1/4W	
R 35	Not assigned		
R 36	CF,(ARD25T471J)	470Ω,±5%,1/4W	

( ): Manufacturer's part number
* : Selected at factory

44W88390 7/13

Parts List: A1 ERROR DET (RECEIVER) **12**

CKT REF	DESCRIPTION	RATING	NOTE
R 37	CF,(ARD25T561J)	560Ω,±5%,1/4W	
R 38	CF,(ARD25T100J)	10Ω,±5%,1/4W	
R 39	CF,(ARD25T271J)	270Ω,±5%,1/4W	
R 40	CF,(ARD25T472J)	4.7kΩ,±5%,1/4W	
R 41	CF,(ARD25T151J)	150Ω,±5%,1/4W	
R 42	CF,(ARD25T153J)	15kΩ,±5%,1/4W	
R 43	CF,(ARD25T103J)	10kΩ,±5%,1/4W	
R 44	CF,(ARD25T104J)	100kΩ,±5%,1/4W	
R 45	CF,(ARD25T301J)	300Ω,±5%,1/4W	
R 46	CF,(ARD25T510J)	51Ω,±5%,1/4W	
R 47	CF,(ARD25T472J)	4.7kΩ,±5%,1/4W	
R 48	CF,(ARD25T105J)	1MΩ,±5%,1/4W	
R 49	CM,var,(RJ-6P 2KΩ)	2kΩ,1/2W	
R 50	CF,(ARD25T103J)	10kΩ,±5%,1/4W	
R 51	CF,(ARD25T332J)	3.3kΩ,±5%,1/4W	
R 52	CF,(ARD25T332J)	3.3kΩ,±5%,1/4W	
R 53	CM,var,(RJ-6P 2KΩ)	2kΩ,1/2W	
R 54	CF,(ARD25T101J)	100Ω,±5%,1/4W	
R 55	CF,(ARD25T471J)	470Ω,±5%,1/4W	
R 56	CF,(ARD25T151J)	150Ω,±5%,1/4W	
R 57	CF,(ARD25T471J)	470Ω,±5%,1/4W	
R 58	Not assigned		
R 59	CF,(ARD25T102J)	1kΩ,±5%,1/4W	
R 60	CF,(ARD25T332J)	3.3kΩ,±5%,1/4W	
R 61	CF,(ARD25T221J)	220Ω,±5%,1/4W	
R 62	CF,(ARD25T391J)	390Ω,±5%,1/4W	
R 63	CF,(ARD25T151J)	150Ω,±5%,1/4W	
R 64	CF,(ARD25T330J)	33Ω,±5%,1/4W	
R 65	CF,(ARD25T103J)	10kΩ,±5%,1/4W	
R 66	CF,(ARD25T222J)	2.2kΩ,±5%,1/4W	
R 67	CF,(ARD25T222J)	2.2kΩ,±5%,1/4W	
R 68	MF,(RN14K2E3010D)	301Ω,±0.5%,1/4W	
R 69	CM,var,(RJ-6P 1KΩ)	1kΩ,1/2W	
R 70	CM,var,(RJ-6P 1KΩ)	1kΩ,1/2W	
R 71	CF,(ARD25T102J)	1kΩ,±5%,1/4W	
R 72	CF,(ARD25T561J)	560Ω,±5%,1/4W	
R 73	CM,var,(RJ-6P 1KΩ)	1kΩ,1/2W	
R 74	CF,(ARD25T101J)	100Ω,±5%,1/4W	
R 75	CF,(ARD25T181J)	180Ω,±5%,1/4W	
R 76	CF,(ARD25T221J)	220Ω,±5%,1/4W	
R 77	SIP type,(RRS-6-681JA)	680Ω x 6,±5%,1/8W	
R 78	CF,(ARD25T181J)	180Ω,±5%,1/4W	
R 79	CF,(ARD25T221J)	220Ω,±5%,1/4W	
R 80	CF,(ARD25T681J)	680Ω,±5%,1/4W	
R 81	CF,(ARD25T151J)	150Ω,±5%,1/4W	
R 82	MF,(RN14K2E3010D)	301Ω,±0.5%,1/4W	
R 83	MF,(RN14K2E1000D)	100Ω,±0.5%,1/4W	

( ): Manufacturer's part number
* : Selected at factory

44W88390 8/13

Parts List: A1 ERROR DET (RECEIVER) **12**

CKT REF	DESCRIPTION	RATING	NOTE
R 84	MF,(RN14K2E4640D)	464Ω,±0.5%,1/4W	
R 85	CF,(ARD25T151J)	150Ω,±5%,1/4W	
R 86	MF,(RN14K2H221J)	0.22kΩ,±5%,1/2W	
R 87	CF,(ARD25T750J)	75Ω,±5%,1/4W	
R 88	SIP type,(RRS-4-681JA)	680Ω x 4,±5%,1/8W	
R 89	Not assigned		
R 90	CF,(ARD25T151J)	150Ω,±5%,1/4W	
R 91	CF,(ARD25T151J)	150Ω,±5%,1/4W	
R 92	CF,(ARD25T681J)	680Ω,±5%,1/4W	
R 93	CF,(ARD25T221J)	220Ω,±5%,1/4W	
R 94	CF,(ARD25T181J)	180Ω,±5%,1/4W	
R 95	MF,(RN14K2E3010D)	301Ω,±0.5%,1/4W	
R 96	MF,(RN14K2E1000D)	100Ω,±0.5%,1/4W	
R 97	CF,(ARD25T822J)	8.2kΩ,±5%,1/4W	
R 98	MF,(RN14K2E3920D)	392Ω,±0.5%,1/4W	
R 99	CF,(ARD25T750J)	75Ω,±5%,1/4W	
R100	CF,(ARD25T472J)	4.7kΩ,±5%,1/4W	
R101	CF,(ARD25T151J)	150Ω,±5%,1/4W	
R102	CF,(ARD25T821J)	820Ω,±5%,1/4W	
R103	CF,(ARD25T151J)	150Ω,±5%,1/4W	
R104	CF,(ARD25T182J)	1.8kΩ,±5%,1/4W	
R105	CF,(ARD25T151J)	150Ω,±5%,1/4W	
R106	CF,(ARD25T102J)	1kΩ,±5%,1/4W	
R107	CM,var,(RJ-6P 500Ω)	500Ω,1/2W	
R108	CF,(ARD25T102J)	1kΩ,±5%,1/4W	
R109	CF,(ARD25T151J)	150Ω,±5%,1/4W	
R110	CF,(ARD25T472J)	4.7kΩ,±5%,1/4W	
R111	CF,(ARD25T472J)	4.7kΩ,±5%,1/4W	
R112	MF,(RN14K2H680J)	68Ω,±5%,1/2W	
R113	CF,(ARD25T561J)	560Ω,±5%,1/4W	
R114	CF,(ARD25T151J)	150Ω,±5%,1/4W	
R115	CF,(ARD25T332J)	3.3kΩ,±5%,1/4W	
R116	CF,(ARD25T682J)	6.8kΩ,±5%,1/4W	
R117	CF,(ARD25T151J)	150Ω,±5%,1/4W	
R118	CM,var,(RJ-6P 1kΩ)	1kΩ,1/2W	
R119	CF,(ARD25T510J)	51Ω,±5%,1/4W	
R120	CF,(ARD25T151J)	150Ω,±5%,1/4W	
R121	CF,(ARD25T391J)	390Ω,±5%,1/4W	
R122	CF,(ARD25T102J)	1kΩ,±5%,1/4W	
R123	CF,(ARD25T102J)	1kΩ,±5%,1/4W	
R124	CF,(ARD25T222J)	2.2kΩ,±5%,1/4W	
R125	CF,(ARD25T151J)	150Ω,±5%,1/4W	
R126	CF,(ARD25T750J)	75Ω,±5%,1/4W	
R127	CF,(ARD25T151J)	150Ω,±5%,1/4W	
R128	CF,(ARD25T821J)	820Ω,±5%,1/4W	
R129	CF,(ARD25T102J)	1kΩ,±5%,1/4W	
R130	CM,var,(RJ-6P 1kΩ)	1kΩ,1/2W	

( ): Manufacturer's part number
* : Selected at factory

Parts List: A1 ERROR DET (RECEIVER) **12**

CKT REF	DESCRIPTION	RATING	NOTE
R131	CF,(ARD25T102J)	1kΩ,±5%,1/4W	
R132	CF,(ARD25T750J)	75Ω,±5%,1/4W	
R133	CF,(ARD25T392J)	3.9kΩ,±5%,1/4W	
R134	CF,(ARD25T151J)	150Ω,±5%,1/4W	
R135	Not assigned		
R136	Not assigned		
R137	Not assigned		
R138	Not assigned		
R139	Not assigned		
R140	Not assigned		
R141	CF,(ARD25T391J)	390Ω,±5%,1/4W	
R142	SIP type,(RRS-4-681JA)	680Ω x 4,±5%,1/8W	
R143	CF,(ARD25T330J)	33Ω,±5%,1/4W	
R144	CM,var,(RJ-6P 20Ω)	20Ω,1/2W	
R145	CF,(ARD25T222J)	2.2kΩ,±5%,1/4W	
R146	CF,(ARD25T561J)	560Ω,±5%,1/4W	
R147	CM,var,(RJ-6P 200Ω)	200Ω,1/2W	
R148	SIP type,(RRS-4-681JA)	680Ω x 4,±5%,1/8W	
R149	CF,(ARD25T331J)	330Ω,±5%,1/4W	
R150	CF,(ARD25T103J)	10kΩ,±5%,1/4W	
R151	CF,(ARD25T681J)	680Ω,±5%,1/4W	
R152	CF,(ARD25T102J)	1kΩ,±5%,1/4W	
R153	CF,(ARD25T391J)	390Ω,±5%,1/4W	
R154	CF,(ARD25T820J)	82Ω,±5%,1/4W	
R155	CM,var,(RJ-6P 50Ω)	50Ω,1/2W	
R156	CF,(ARD25T222J)	2.2kΩ,±5%,1/4W	
R157	CF,(ARD25T561J)	560Ω,±5%,1/4W	
R158	CM,var,(RJ-6P 200Ω)	200Ω,1/2W	
R159	SIP type,(RRS-4-681JA)	680Ω x 4,±5%,1/8W	
R160	CF,(ARD25T121J)	120Ω,±5%,1/4W	
R161	CF,(ARD25T103J)	10kΩ,±5%,1/4W	
R162	CF,(ARD25T102J)	1kΩ,±5%,1/4W	
R163	SIP type,(RRS-6-681JA)	680Ω x 6,±5%,1/8W	
R164	CF,(ARD25T680J)	68Ω,±5%,1/4W	
R165	CF,(ARD25T391J)	390Ω,±5%,1/4W	
R166	CM,var,(RJ-6P 50Ω)	50Ω,1/2W	
R167	CF,(ARD25T222J)	2.2kΩ,±5%,1/4W	
R168	CF,(ARD25T561J)	560Ω,±5%,1/4W	
R169	CM,var,(RJ-6P 200Ω)	200Ω,1/2W	
R170	CF,(ARD25T680J)	68Ω,±5%,1/4W	
R171	Not assigned		
R172	CF,(ARD25T103J)	10kΩ,±5%,1/4W	
R173	CF,(ARD25T391J)	390Ω,±5%,1/4W	
R174	CF,(ARD25T820J)	82Ω,±5%,1/4W	
R175	CF,(ARD25T102J)	1kΩ,±5%,1/4W	
R176	CM,var,(RJ-6P 200Ω)	200Ω,1/2W	
R177	CF,(ARD25T221J)	220Ω,±5%,1/4W	

( ): Manufacturer's part number
* : Selected at factory

Parts List: A1 ERROR DET (RECEIVER) **12**

CKT REF	DESCRIPTION	RATING	NOTE
R178	CF,(ARD25T181J)	180Ω,±5%,1/4W	
R179	MF,(RN14K2E7680D)	768Ω,±0.5%,1/4W	
R180	CM,var,(RJ-6P 50Ω)	50Ω,1/2W	
R181	CF,(ARD25T222J)	2.2kΩ,±5%,1/4W	
R182	CF,(ARD25T561J)	560Ω,±5%,1/4W	
R183	CF,(ARD25T820J)	82Ω,±5%,1/4W	
R184	CF,(ARD25T102J)	1kΩ,±5%,1/4W	
R185	CF,(ARD25T103J)	10kΩ,±5%,1/4W	
R186	CM,var,(RJ-6P 10KΩ)	10kΩ,1/2W	
R187	MF,(RN14K2E4991D)	4.99kΩ,±0.5%,1/4W	
R188	CM,var,(RJ-6P 100KΩ)	100kΩ,1/2W	
R189	MF,(RN14K2E2001D)	2kΩ,±0.5%,1/4W	
R190	CF,(ARD25T682J)	6.8kΩ,±5%,1/4W	
R191	CF,(ARD25T102J)	1kΩ,±5%,1/4W	
R192	MF,(RN14K2H391J)	0.39kΩ,±5%,1/2W	
R193	MF,(RN14K2H391J)	0.39kΩ,±5%,1/2W	
R194	SIP type,(RRS-4-103JA)	10kΩ x 4,±5%,1/8W	
R195	CM,var,(RJ-6P 200Ω)	200Ω,1/2W	
R196	MF,(RN14K2E1210D)	121Ω,±0.5%,1/4W	
R197	CF,(ARD25T151J)	150Ω,±5%,1/4W	
R198	CF,(ARD25T151J)	150Ω,±5%,1/4W	
R199	CF,(ARD25T182J)	1.8kΩ,±5%,1/4W	
R200	CM,var,(RJ-6P 200Ω)	200Ω,1/2W	
R201	MF,(RN14K2E1210D)	121Ω,±0.5%,1/4W	
R202	CF,(ARD25T151J)	150Ω,±5%,1/4W	
R203	CF,(ARD25T151J)	150Ω,±5%,1/4W	
R204	CF,(ARD25T182J)	1.8kΩ,±5%,1/4W	
R205	CF,(ARD25T102J)	1kΩ,±5%,1/4W	
R206	CF,(ARD25T471J)	470Ω,±5%,1/4W	
R207	CF,(ARD25T151J)	150Ω,±5%,1/4W	
R208	CF,(ARD25T102J)	1kΩ,±5%,1/4W	
R209	CF,(ARD25T471J)	470Ω,±5%,1/4W	
R210	CF,(ARD25T151J)	150Ω,±5%,1/4W	
R211	CF,(ARD25T511J)	510Ω,±5%,1/4W	
R212	Not assigned		
R213	Not assigned		
R214	Not assigned		
R215	CF,(ARD25T102J)	1kΩ,±5%,1/4W	
R216	Not assigned		
R217	CM,var,(RJ-6P 1kΩ)	1kΩ,1/2W	
R218	CF,(ARD25T151J)	150Ω,±5%,1/4W	
R219	CF,(ARD25T511J)	510Ω,±5%,1/4W	
R220	CF,(ARD25T221J)	220Ω,±5%,1/4W	
R221	Not assigned		
R222	CF,(ARD25T221J)	220Ω,±5%,1/4W	
R223	Not assigned		
R224	CF,(ARD25T152J)	1.5kΩ,±5%,1/4W	

( ): Manufacturer's part number
* : Selected at factory

Parts List: A1 ERROR DET (RECEIVER) **12**

CKT REF	DESCRIPTION	RATING	NOTE
R225	CF,(ARD25T102J)	1kΩ,±5%,1/4W	
R226	CF,(ARD25T151J)	150Ω,±5%,1/4W	
R227	Not assigned		
R228	CM,var,(RJ-6P 1kΩ)	1kΩ,1/2W	
R229	CF,(ARD25T182J)	1.8kΩ,±5%,1/4W	
R230	CF,(ARD25T102J)	1kΩ,±5%,1/4W	
R231	CF,(ARD25T471J)	470Ω,±5%,1/4W	
R232	CF,(ARD25T151J)	150Ω,±5%,1/4W	
R233	CF,(ARD25T104J)	100kΩ,±5%,1/4W	
R234	Not assigned		
R235	CF,(ARD25T104J)	100kΩ,±5%,1/4W	
R236	CF,(ARD25T223J)	22kΩ,±5%,1/4W	
R237	CF,(ARD25T473J)	47kΩ,±5%,1/4W	
R238	CF,(ARD25T223J)	22kΩ,±5%,1/4W	
R239	CF,(ARD25T223J)	22kΩ,±5%,1/4W	
R240	CF,(ARD25T473J)	47kΩ,±5%,1/4W	
R241	CF,(ARD25T473J)	47kΩ,±5%,1/4W	
R242	CF,(ARD25T561J)	560Ω,±5%,1/4W	
R243	CF,(ARD25T151J)	150Ω,±5%,1/4W	
R244	CF,(ARD25T271J)	270Ω,±5%,1/4W	
R245	CF,(ARD25T152J)	1.5kΩ,±5%,1/4W	
R246	CF,(ARD25T471J)	470Ω,±5%,1/4W	
R247	CF,(ARD25T221J)	220Ω,±5%,1/4W	
R248	CF,(ARD25T181J)	180Ω,±5%,1/4W	
R249	Not assigned		
R250	Not assigned		
R251	CF,(ARD25T181J)	180Ω,±5%,1/4W	
R252	CF,(ARD25T111J)	110Ω,±5%,1/4W	
R253	CF,(ARD25T332J)	3.3kΩ,±5%,1/4W	
R254	CF,(ARD25T221J)	220Ω,±5%,1/4W	
R255	Not assigned		
R256	CF,(ARD25T473J)	47kΩ,±5%,1/4W	
R257	CF,(ARD25T472J)	4.7kΩ,±5%,1/4W	
R258	CF,(ARD25T472J)	4.7kΩ,±5%,1/4W	
R259	CF,(ARD25T151J)	150Ω,±5%,1/4W	
R260	CF,(ARD25T331J)	330Ω,±5%,1/4W	
R261	CF,(ARD25T331J)	330Ω,±5%,1/4W	
R262	CF,(ARD25T221J)	220Ω,±5%,1/4W	
R263	CF,(ARD25T472J)	4.7kΩ,±5%,1/4W	
R264	CF,(ARD25T472J)	4.7kΩ,±5%,1/4W	
R265	CF,(ARD25T151J)	150Ω,±5%,1/4W	
R266	CF,(ARD25T561J)	560Ω,±5%,1/4W	
R267	CF,(ARD25T332J)	3.3kΩ,±5%,1/4W	
R268	CM,var,(RJ-6P 2kΩ)	2kΩ,1/2W	
S 1	DIP,(DIP-A(4))		

( ): Manufacturer's part number
* : Selected at factory

Parts List: A1 ERROR DET (RECEIVER) **12**

CKT REF	DESCRIPTION	RATING	NOTE
T 1	Trans,(342T67152C)		
Z 1	Delay line,(AT-08)		
Z 2	Delay line,(AT-08)		
Z 3	Delay line,(AT-04)		
Z 4	Delay line,(AT-50)		
Z 5	Delay line,(AT-30)		
Z 6	Delay line,(AN-150)		

( ): Manufacturer's part number
* : Selected at factory

44W88390 | 13/13

Parts List: A3 R-DISPLAY (RECEIVER) **13**

CKT REF	DESCRIPTION	RATING	NOTE
C 1	Elect,(KME10T-220M)	220μF,±20%,10V	
C 2	Cer,(CK924F1H104Z)	0.1μF,+80/-20%,50V	
C 3	Cer,(CK924F1H104Z)	0.1μF,+80/-20%,50V	
C 4	Cer,(CK924F1H104Z)	0.1μF,+80/-20%,50V	
C 5	Cer,(CK924F1H104Z)	0.1μF,+80/-20%,50V	
C 6	Cer,(CK924F1H104Z)	0.1μF,+80/-20%,50V	
C 7	Elect,(KME10T-220M)	220μF,±20%,10V	
C 8	Elect,(KME10T-220M)	220μF,±20%,10V	
C 9	Elect,(KME10T-220M)	220μF,±20%,10V	
C 10	Elect,(KME10T-220M)	220μF,±20%,10V	
J 1	Plug,(CNF3-40P-2.54DSA)	40pins	
Q 1	Not assigned		
Q 2	IC,(74LS139)		
Q 3	IC,(74HC238)		
Q 4	IC,(TD62381P)		
Q 5	IC,(TD62785AP)		
Q 6	IC,(74HC238)		
Q 7	IC,(TD62381P)		
Q 8	Not assigned		
Q 9	IC,(74HC238)		
Q 10	IC,(TD62785AP)		
Q 11	IC,(TD62381P)		
Q 12	Not assigned		
Q 13	IC,(LN442YPH)		
Q 14 to Q 61	LED,(TLG209)		
Q 62	LED,(LN210RP)		
Q 63	LED,(LN210RP)		
Q 64	LED,(LN210RP)		
Q 65	LED,(LN210RP)		
Q 66	LED,(LN210RP)		
Q 67	LED,(LN410YP)		
Q 68	LED,(LN410YP)		
Q 69	LED,(LN410YP)		
Q 70	LED,(LN410YP)		
Q 71	LED,(LN410YP)		
Q 72	LED,(LN210RP)		
Q 73	LED,(LN310GP)		
Q 74	LED,(LT9200N)		
Q 75	LED,(LT9200N)		
Q 76	LED,(LT9200N)		
Q 77	Not assigned		

( ): Manufacturer's part number
* : Selected at factory

44W88392 | 1/2

Parts List: A3 R-DISPLAY (RECEIVER) **13**

CKT REF	DESCRIPTION	RATING	NOTE
Q 78	Not assigned		
Q 79	Not assigned		
Q 80 to Q 93	IC,(LN513GK)		
R 1	CF,(ARD25T621J)	620Ω,±5%,1/4W	
R 2	CF,(ARD25T330J)	33Ω,±5%,1/4W	
R 3	SIP type,(RRS-6-223JA)	22kΩ x 6,±5%,1/8W	
R 4	SIP type,(RRS-6-223JA)	22kΩ x 6,±5%,1/8W	
R 5	SIP type,(RRS-7-330JB)	33Ω x 7,±5%,1/8W	
R 6	SIP type,(RRS-7-330JB)	33Ω x 7,±5%,1/8W	
R 7	SIP type,(RRS-4-223JA)	22kΩ x 4,±5%,1/8W	
R 8	SIP type,(RRS-7-330JB)	33Ω x 7,±5%,1/8W	
R 9	CF,(ARD25T330J)	33Ω,±5%,1/4W	
S 1 to S 22	Switch,(TM1-01)		

( ): Manufacturer's part number
* : Selected at factory

44W88392 | 2/2

Parts List: A5 JITTER MEASUREMENT (RECEIVER) **14**

CKT REF	DESCRIPTION	RATING	NOTE
C 1	Cer,(CK924F1H104Z)	0.1μF,+80/-20%,50V	
C 2	Cer,(CK924F1H104Z)	0.1μF,+80/-20%,50V	
C 3	Cer,(CK924F1H104Z)	0.1μF,+80/-20%,50V	
C 4	Cer,(CK924F1H104Z)	0.1μF,+80/-20%,50V	
C 5	Cer,(CK924F1H104Z)	0.1μF,+80/-20%,50V	
C 6	Elect,(CE04C1C331A)	330μF,±20%,16V	
C 7	Cer,(CK924F1H104Z)	0.1μF,+80/-20%,50V	
C 8	Cer,(CK924F1H104Z)	0.1μF,+80/-20%,50V	
C 9	Not assigned		
C 10	Cer,(CC924CH1H560J)	56pF,±5%,50V	
C 11	Cer,(CC45CK1H010CY)	1pF,±0.25pF,50V	
C 12	Cer,(CK924F1H104Z)	0.1μF,+80/-20%,50V	
C 13	Cer,(CK924F1H104Z)	0.1μF,+80/-20%,50V	
C 14	Cer,(CK924F1H104Z)	0.1μF,+80/-20%,50V	
C 15	Cer,(CK924F1H104Z)	0.1μF,+80/-20%,50V	
C 16	Cer,(CK924F1H104Z)	0.1μF,+80/-20%,50V	
C 17	Cer,(CK924F1H104Z)	0.1μF,+80/-20%,50V	
C 18	Cer,(CK924F1H104Z)	0.1μF,+80/-20%,50V	
C 19	Cer,(CK924F1H104Z)	0.1μF,+80/-20%,50V	
C 20	Cer,(CK924F1H104Z)	0.1μF,+80/-20%,50V	
C 21	Not assigned		
C 22	Plast,(ECQ-P1103FZ)	0.01μF,±1%,100V	
C 23	Cer,(CK924F1H104Z)	0.1μF,+80/-20%,50V	
C 24	Elect,(CE04C1E101A)	100μF,±20%,25V	
C 25	Cer,(CK924F1H104Z)	0.1μF,+80/-20%,50V	
C 26	Elect,(CE04C1C331A)	330μF,±20%,16V	
C 27	Elect,(CE04C1C331A)	330μF,±20%,16V	
C 28	Elect,(CE04C1C331A)	330μF,±20%,16V	
C 29	Elect,(CE04C1C331A)	330μF,±20%,16V	
C 30	Elect,(CE04C1C331A)	330μF,±20%,16V	
C 31	Elect,(CE04C1C331A)	330μF,±20%,16V	
C 32	Cer,(CK924F1H104Z)	0.1μF,+80/-20%,50V	
C 33	Elect,(CE04C1C331A)	330μF,±20%,16V	
C 34	Elect,(CE04C1C331A)	330μF,±20%,16V	
C 35	Cer,(CK924F1H104Z)	0.1μF,+80/-20%,50V	
C 36	Cer,(CK924F1H104Z)	0.1μF,+80/-20%,50V	
C 37	Cer,(CK924F1H104Z)	0.1μF,+80/-20%,50V	
C 38	Cer,(CK924F1H104Z)	0.1μF,+80/-20%,50V	
C 39	Cer,(CC924CH1H221J)	220pF,±5%,50V	
C 40	Cer,(CK924F1H104Z)	0.1μF,+80/-20%,50V	
C 41	Cer,(CK924F1H104Z)	0.1μF,+80/-20%,50V	
C 42	Elect,(CE04C1H2R2A)	2.2μF,±20%,50V	
C 43	Elect,(CE04C1E470A)	47μF,±20%,25V	
C 44	Cer,(CK924F1H104Z)	0.1μF,+80/-20%,50V	
C 45	Cer,(CK924F1H104Z)	0.1μF,+80/-20%,50V	
C 46	Cer,(CK924F1H104Z)	0.1μF,+80/-20%,50V	
C 47	Cer,(CK924F1H104Z)	0.1μF,+80/-20%,50V	

( ): Manufacturer's part number
* : Selected at factory

44W88395 | 1/8

Parts List: A5 JITTER MEASUREMENT (RECEIVER) **14**

CKT REF	DESCRIPTION	RATING	NOTE
C 48	Cer,(CK924F1H104Z)	0.1μF,+80/-20%,50V	
C 49	Cer,(CK924F1H104Z)	0.1μF,+80/-20%,50V	
C 50	Cer,(CK924F1H104Z)	0.1μF,+80/-20%,50V	
C 51	Cer,(CK924F1H104Z)	0.1μF,+80/-20%,50V	
C 52	Cer,(CK924F1H104Z)	0.1μF,+80/-20%,50V	
C 53	Plast,(ECQ-P1332FZ)	3300pF,±1%,100V	
C 54	Plast,(ECQ-P1242FZ)	2400pF,±1%,100V	
C 55	Cer,(RPE111CH511G50)	510pF,±2%,50V	
C 56	Plast,(ECQ-P1182FZ)	1800pF,±1%,100V	
C 57	Plast,(ECQ-P1152FZ)	1500pF,±1%,100V	
C 58	Cer,(CC924CH1H331J)	330pF,±5%,50V	
C 59	Cer,(CC924CH1H821J)	820pF,±5%,50V	
C 60	Cer,(CC924CH1H621J)	620pF,±5%,50V	
C 61	Cer,(RPE111CH131G50)	130pF,±2%,50V	
C 62	Cer,(CC45CH1H151JY)	150pF,±5%,50V	
C 63	Cer,(CC45CH1H101JY)	100pF,±5%,50V	
C 64	Cer,(CC45CH1H100JY)	10pF,±5%,50V	
C 65	Plast,(ECQ-P1332FZ)	3300pF,±1%,100V	
C 66	Plast,(ECQ-P1242FZ)	2400pF,±1%,100V	
C 67	Cer,(RPE111CH511G50)	510pF,±2%,50V	
C 68	Plast,(ECQ-P1182FZ)	1800pF,±1%,100V	
C 69	Plast,(ECQ-P1152FZ)	1500pF,±1%,100V	
C 70	Cer,(CC924CH1H331J)	330pF,±5%,50V	
C 71	Cer,(CC924CH1H821J)	820pF,±5%,50V	
C 72	Cer,(CC924CH1H621J)	620pF,±5%,50V	
C 73	Cer,(RPE111CH131G50)	130pF,±2%,50V	
C 74	Cer,(CC45CH1H151JY)	150pF,±5%,50V	
C 75	Cer,(CC45CH1H101JY)	100pF,±5%,50V	
C 76	Cer,(CC45CH1H100JY)	10pF,±5%,50V	
C 77	Cer,(CK924F1H104Z)	0.1μF,+80/-20%,50V	
C 78	Plast,(ECQ-V1H105JW)	1μF,±5%,50V	
C 79	Cer,(CK924F1H104Z)	0.1μF,+80/-20%,50V	
C 80	Cer,(CC45CK1H010CY)	1pF,±0.25pF,50V	
C 81	Cer,(CK924F1H104Z)	0.1μF,+80/-20%,50V	
C 82	Cer,(CK924F1H104Z)	0.1μF,+80/-20%,50V	
C 83	Plast,(ECQ-P1241FZ)	2400pF,±1%,100V	
C 84	Cer,(RPE111CH361G50)	360pF,±2%,50V	
C 85	Plast,(ECQ-P1242FZ)	2400pF,±1%,100V	
C 86	Cer,(CK924F1H104Z)	0.1μF,+80/-20%,50V	
C 87	Plast,(ECQ-P1242FZ)	2400pF,±1%,100V	
C 88	Plast,(ECQ-P1103FZ)	0.01μF,±1%,100V	
C 89	Plast,(ECQ-P1103FZ)	0.01μF,±1%,100V	
C 90	Plast,(ECQ-P1103FZ)	0.01μF,±1%,100V	
C 91	Plast,(ECQ-V1H105JW)	1μF,±5%,50V	
C 92	Cer,(CK924F1H104Z)	0.1μF,+80/-20%,50V	
C 93	Cer,(CK924F1H104Z)	0.1μF,+80/-20%,50V	
C 94	Cer,(CK924F1H104Z)	0.1μF,+80/-20%,50V	

( ): Manufacturer's part number
* : Selected at factory

44W88395 2/8

Parts List: A5 JITTER MEASUREMENT (RECEIVER) **14**

CKT REF	DESCRIPTION	RATING	NOTE
C 95	Cer,(CK924F1H104Z)	0.1μF,+80/-20%,50V	
C 96	Cer,(CK924F1H104Z)	0.1μF,+80/-20%,50V	
C 97	Cer,(CC45CK1H010CY)	1pF,±0.25pF,50V	
C 98	Cer,(CC45CH1H470JY)	47pF,±5%,50V	
C 99	Cer,(CK924F1H104Z)	0.1μF,+80/-20%,50V	
C100	Cer,(CK924F1H104Z)	0.1μF,+80/-20%,50V	
C101	Cer,(CK924F1H104Z)	0.1μF,+80/-20%,50V	
C102	Cer,(CK924F1H104Z)	0.1μF,+80/-20%,50V	
C103	Elect,(CE04C1E101A)	100μF,±20%,25V	
C104	Elect,(CE04C1E101A)	100μF,±20%,25V	
C105	Cer,(CK924F1H104Z)	0.1μF,+80/-20%,50V	
C106	Cer,(CK924F1H104Z)	0.1μF,+80/-20%,50V	
C107	Cer,(CC45CK1H010CY)	1pF,±0.25pF,50V	
C108	Cer,(CC45CH1H060DY)	6pF,±0.5pF,50V	
C109	Cer,(CC45CH1H060DY)	6pF,±0.5pF,50V	
C110	Cer,(CC45CH1H220JY)	22pF,±5%,50V	
C111	Cer,(CC924CH1H471J)	470pF,±5%,50V	
C112	Cer,(CC45CH1H050CY)	5pF,±0.25pF,50V	
J 1	Cable,(CNF23-26D-AA10S)		
J 2	Plug,(DF1-2P-2.5DSA)	2pins	
J 3	Plug,(DF1-2P-2.5DSA)	2pins	
K 1	Relay,(SV-5)		
K 2	Relay,(SV-5)		
K 3	Relay,(SV-5)		
L 1	Coil,(10K17-85T)	0.358μH	
L 2	Coil,(LH1-332K)	3.3mH,±10%	
L 3	Coil,(LH1-332K)	3.3mH,±10%	
L 4	Coil,(LH1-152K)	1.5mH,±10%	
L 5	Coil,(LH1-152K)	1.5mH,±10%	
L 6	Coil,(LH1-152K)	1.5mH,±10%	
L 7	Coil,(LH1-821K)	820μH,±10%	
L 8	Coil,(LH1-821K)	820μH,±10%	
L 9	Coil,(LH1-821K)	820μH,±10%	
L 10	Coil,(LF8-391K)	390μH,±10%	
L 11	Coil,(LF8-121K)	120μH,±10%	
L 12	Coil,(LF8-121K)	120μH,±10%	
L 13	Coil,(LF8-560K)	56μH,±10%	
L 14	Coil,(LH1-332K)	3.3mH,±10%	
L 15	Coil,(LH1-332K)	3.3mH,±10%	
L 16	Coil,(LH1-152K)	1.5mH,±10%	
L 17	Coil,(LH1-152K)	1.5mH,±10%	

( ): Manufacturer's part number
* : Selected at factory

44W88395 3/8

Parts List: A5 JITTER MEASUREMENT (RECEIVER) **14**

CKT REF	DESCRIPTION	RATING	NOTE
L 18	Coil,(LH1-152K)	1.5mH,±10%	
L 19	Coil,(LH1-821K)	820μH,±10%	
L 20	Coil,(LH1-821K)	820μH,±10%	
L 21	Coil,(LH1-821K)	820μH,±10%	
L 22	Coil,(LF8-391K)	390μH,±10%	
L 23	Coil,(LF8-121K)	120μH,±10%	
L 24	Coil,(LF8-121K)	120μH,±10%	
L 25	Coil,(LF8-560K)	56μH,±10%	
Q 1	Tr,(2SC1907)		
Q 2	Tr,(2SA1206)		
Q 3	Tr,(2SA1206)		
Q 4	Tr,(2SA1206)		
Q 5	Tr,(2SA1206)		
Q 6	IC,(μPC14305H)		
Q 7	Di,(1S953)		
Q 8	IC,(μPC151C)		
Q 9	IC,(NJU201AD)		
Q 10	IC,(NJU201AD)		
Q 11	IC,(HD10124)		
Q 12	IC,(μPD8255AC-2)		
Q 13	IC,(HD10116)		
Q 14	IC,(HD10105)		
Q 15	IC,(HD10131)		
Q 16	IC,(HD10102)		
Q 17	IC,(HD10102)		
Q 18	IC,(HD10131)		
Q 19	Tr,(2SC2718)		
Q 20	Tr,(2SC2718)		
Q 21	Tr,(2SC2718)		
Q 22	Tr,(2SC2718)		
Q 23	IC,(NJU201AD)		
Q 24	IC,(74LS14)		
Q 25	IC,(74LS20)		
Q 26	IC,(74LS393)		
Q 27	IC,(74LS393)		
Q 28	IC,(TD62003P)		
Q 29	IC,(74LS86)		
Q 30	IC,(74LS74A)		
Q 31	IC,(74LS123)		
Q 32	Di,(1S953)		
Q 33	IC,(HD10136)		
Q 34	IC,(HD10136)		
Q 35	IC,(MC12040L)		
Q 36	IC,(HD10102)		
Q 37	IC,(HD10102)		

( ): Manufacturer's part number
* : Selected at factory

44W88395 4/8

Parts List: A5 JITTER MEASUREMENT (RECEIVER) **14**

CKT REF	DESCRIPTION	RATING	NOTE
Q 38	Not assigned		
Q 39	IC,(NJU201AD)		
Q 40	Tr,(2SC2718)		
Q 41	Tr,(2SC2718)		
Q 42	Tr,(2SC2718)		
Q 43	Tr,(2SC2718)		
Q 44	IC,(NJU201AD)		
Q 45	IC,(HA3-2525-5)		
Q 46	IC,(μPC151C)		
Q 47	IC,(HA3-2525-5)		
Q 48	Tr,(2SC2718)		
Q 49	Tr,(2SC2718)		
Q 50	Tr,(2SC2718)		
Q 51	Tr,(2SC2718)		
Q 52	IC,(HA3-2525-5)		
Q 53	IC,(NJU201AD)		
Q 54	IC,(HA3-2525-5)		
Q 55	IC,(HA3-2525-5)		
Q 56	IC,(HA3-2525-5)		
Q 57	IC,(μPC271C)		
Q 58	Di,breakdown,(1SZ52)	5.9 to 6.5V,250mW	
Q 59	IC,(μPC151C)		
Q 60	IC,(HA17012PC)		
Q 61	IC,(74LS191)		
Q 62	IC,(74LS191)		
Q 63	IC,(74LS191)		
Q 64	IC,(74LS123)		
Q 65	IC,(μPC271C)		
Q 66	IC,(μPC271C)		
Q 67	Tr,(2SC1907)		
Q 68	IC,(NJU201AD)		
Q 69	Not assigned		
Q 70	Not assigned		
Q 71	Not assigned		
Q 72	Not assigned		
Q 73	Not assigned		
Q 74	Not assigned		
Q 75	Not assigned		
Q 76	IC,(74LS74A)		
R 1	CF,(ARD25T332J)	3.3kΩ,±5%,1/4W	
R 2	CF,(ARD25T332J)	3.3kΩ,±5%,1/4W	
R 3	CF,(ARD25T332J)	3.3kΩ,±5%,1/4W	
R 4	CF,(ARD25T332J)	3.3kΩ,±5%,1/4W	
R 5	CF,(ARD25T472J)	4.7kΩ,±5%,1/4W	
R 6	CF,(ARD25T331J)	330Ω,±5%,1/4W	

( ): Manufacturer's part number
* : Selected at factory

44W88395 5/8

Parts List: A5 JITTER MEASUREMENT (RECEIVER) **14**

CKT REF	DESCRIPTION	RATING	NOTE
P 7	CF,(ARD25T472J)	4.7kΩ,±5%,1/4W	
R 8	CF,(ARD25T151J)	150Ω,±5%,1/4W	
R 9	CF,(ARD25T222J)	2.2kΩ,±5%,1/4W	
R 10	Not assigned		
R 11	Not assigned		
R 12	Not assigned		
R 13	Not assigned		
R 14	CF,(ARD25T472J)	4.7kΩ,±5%,1/4W	
R 15	CF,(ARD25T103J)	10kΩ,±5%,1/4W	
R 16	CF,(ARD25T223J)	22kΩ,±5%,1/4W	
R 17	CF,(ARD25T104J)	100kΩ,±5%,1/4W	
R 18	CM,var,(RJ-6P 5KΩ)	5kΩ,1/2W	
R 19	CF,(ARD25T222J)	2.2kΩ,±5%,1/4W	
R 20	CF,(ARD25T333J)	33kΩ,±5%,1/4W	
R 21	CF,(ARD25T681J)	680Ω,±5%,1/4W	
R 22	CF,(ARD25T181J)	180Ω,±5%,1/4W	
R 23	CF,(ARD25T221J)	220Ω,±5%,1/4W	
R 24	SIP type,(RRS-6-681JA)	680Ω x 6,±5%,1/8W	
R 25	SIP type,(RRS-8-681JA)	680Ω x 8,±5%,1/8W	
R 26	SIP type,(RRS-6-681JA)	680Ω x 6,±5%,1/8W	
R 27	Not assigned		
R 28	Not assigned		
R 29	CF,(ARD25T101J)	100Ω,±5%,1/4W	
R 30	CF,(ARD25T331J)	330Ω,±5%,1/4W	
R 31	CF,(ARD25T101J)	100Ω,±5%,1/4W	
R 32	CF,(ARD25T331J)	330Ω,±5%,1/4W	
R 33	CF,(ARD25T331J)	330Ω,±5%,1/4W	
R 34	CF,(ARD25T101J)	100Ω,±5%,1/4W	
R 35	CF,(ARD25T331J)	330Ω,±5%,1/4W	
R 36	CF,(ARD25T101J)	100Ω,±5%,1/4W	
R 37	CM,var,(RJ-6P 200Ω)	200Ω,1/2W	
R 38	CM,var,(RJ-6P 200Ω)	200Ω,1/2W	
R 39	CF,(ARD25T222J)	2.2kΩ,±5%,1/4W	
R 40	MF,(RN14K2E6810D)	681Ω,±0.5%,1/4W	
R 41	CF,(ARD25T222J)	2.2kΩ,±5%,1/4W	
R 42	MF,(RN14K2E8060D)	806Ω,±0.5%,1/4W	
R 43	CF,(ARD25T222J)	2.2kΩ,±5%,1/4W	
R 44	MF,(RN14K2E7680D)	768Ω,±0.5%,1/4W	
R 45	CF,(ARD25T222J)	2.2kΩ,±5%,1/4W	
R 46	MF,(RN14K2E8060D)	806Ω,±0.5%,1/4W	
R 47	CM,var,(RJ-6P 200Ω)	200Ω,1/2W	
R 48	CM,var,(RJ-6P 200Ω)	200Ω,1/2W	
R 49	SIP type,(RRS-8-472JA)	4.7kΩ x 8,±5%,1/8W	
R 50	CF,(ARD25T681J)	680Ω,±5%,1/4W	
R 51	CF,(ARD25T683J)	68kΩ,±5%,1/4W	
R 52	CF,(ARD25T103J)	10kΩ,±5%,1/4W	
R 53	CF,(ARD25T223J)	22kΩ,±5%,1/4W	

( ): Manufacturer's part number
* : Selected at factory

44W88395 6/8

Parts List: A5 JITTER MEASUREMENT (RECEIVER) **14**

CKT REF	DESCRIPTION	RATING	NOTE
R 54	MF,(RN14K2E2151D)	2.15kΩ,±0.5%,1/4W	
R 55	MF,(RN14K2E2491D)	2.49kΩ,±0.5%,1/4W	
R 56	MF,(RN14K2E2151D)	2.15kΩ,±0.5%,1/4W	
R 57	MF,(RN14K2E2491D)	2.49kΩ,±0.5%,1/4W	
R 58	MF,(RN14K2E3161D)	3.16kΩ,±0.5%,1/4W	
R 59	CF,(ARD25T474J)	470kΩ,±5%,1/4W	
R 60	Not assigned		
R 61	Not assigned		
R 62	CF,(ARD25T474J)	470kΩ,±5%,1/4W	
R 63	SIP type,(RRS-6-681JA)	680Ω x 6,±5%,1/8W	
R 64	CF,(ARD25T820J)	82Ω,±5%,1/4W	
R 65	CF,(ARD25T131J)	130Ω,±5%,1/4W	
R 66	SIP type,(RRS-6-471JA)	470Ω x 6,±5%,1/8W	
R 67	SIP type,(RRS-8-471JA)	470Ω x 8,±5%,1/8W	
R 68	CF,(ARD25T222J)	2.2kΩ,±5%,1/4W	
R 69	MF,(RN14K2E9090D)	909Ω,±0.5%,1/4W	
R 70	CF,(ARD25T101J)	100Ω,±5%,1/4W	
R 71	CF,(ARD25T222J)	2.2kΩ,±5%,1/4W	
R 72	MF,(RN14K2E8060D)	806Ω,±0.5%,1/4W	
R 73	CF,(ARD25T101J)	100Ω,±5%,1/4W	
R 74	CF,(ARD25T222J)	2.2kΩ,±5%,1/4W	
R 75	MF,(RN14K2E9090D)	909Ω,±0.5%,1/4W	
R 76	CF,(ARD25T101J)	100Ω,±5%,1/4W	
R 77	CF,(ARD25T222J)	2.2kΩ,±5%,1/4W	
R 78	MF,(RN14K2E8660D)	866Ω,±0.5%,1/4W	
R 79	CF,(ARD25T101J)	100Ω,±5%,1/4W	
R 80	MF,(RN14K2E1691D)	1.69kΩ,±0.5%,1/4W	
R 81	CF,(ARD25T682J)	6.8kΩ,±5%,1/4W	
R 82	CF,(ARD25T682J)	6.8kΩ,±5%,1/4W	
R 83	MF,(RN14K2E1101D)	1.1kΩ,±0.5%,1/4W	
R 84	MF,(RN14K2E1101D)	1.1kΩ,±0.5%,1/4W	
R 85	CF,(ARD25T102J)	1kΩ,±5%,1/4W	
R 86	CF,(ARD25T682J)	6.8kΩ,±5%,1/4W	
R 87	CF,(ARD25T682J)	6.8kΩ,±5%,1/4W	
R 88	CF,(ARD25T104J)	100kΩ,±5%,1/4W	
R 89	MF,(RN14K2E1072D)	10.7kΩ,±0.5%,1/4W	
R 90	CF,(ARD25T102J)	1kΩ,±5%,1/4W	
R 91	MF,(RN14K2E5360D)	536Ω,±0.5%,1/4W	
R 92	MF,(RN14K2E2001D)	2kΩ,±0.5%,1/4W	
R 93	CF,(ARD25T103J)	10kΩ,±5%,1/4W	
R 94	MF,(RN14K2E5361D)	5.36kΩ,±0.5%,1/4W	
R 95	MF,(RN14K2E1542D)	15.4kΩ,±0.5%,1/4W	
R 96	CF,(ARD25T102J)	1kΩ,±5%,1/4W	
R 97	CF,(ARD25T102J)	1kΩ,±5%,1/4W	
R 98	CF,(ARD25T222J)	2.2kΩ,±5%,1/4W	
R 99	CF,(ARD25T222J)	2.2kΩ,±5%,1/4W	
R100	CF,(ARD25T103J)	10kΩ,±5%,1/4W	

( ): Manufacturer's part number
* : Selected at factory

44W88395 7/8

Parts List: A5 JITTER MEASUREMENT (RECEIVER) **14**

CKT REF	DESCRIPTION	RATING	NOTE
R101	MF,(RN14K2E1002D)	10kΩ,±0.5%,1/4W	
R102	MF,(RN14K2E3311D)	3.31kΩ,±0.5%,1/4W	
R103	CF,(ARD25T681J)	680Ω,±5%,1/4W	
R104	MF,(RN14K2E3010D)	301Ω,±0.5%,1/4W	
R105	MF,(RN14K2E3011D)	3.01kΩ,±0.5%,1/4W	
R106	MF,(RN14K2E2741D)	2.74kΩ,±0.5%,1/4W	
R107	Not assigned		
R108	MF,(RN14K2E3010D)	301Ω,±0.5%,1/4W	
R109	MF,(RN14K2E1691D)	1.69kΩ,±0.5%,1/4W	
R110	CF,(ARD25T681J)	680Ω,±5%,1/4W	
R111	CF,(ARD25T473J)	47kΩ,±5%,1/4W	
R112	CF,(ARD25T154J)	150kΩ,±5%,1/4W	
R113	CF,(ARD25T152J)	1.5kΩ,±5%,1/4W	
R114	CF,(ARD25T151J)	150Ω,±5%,1/4W	
R115	CF,(ARD25T151J)	150Ω,±5%,1/4W	
R116	CF,(ARD25T152J)	1.5kΩ,±5%,1/4W	
R117	CF,(ARD25T222J)	2.2kΩ,±5%,1/4W	
R118	CF,(ARD25T151J)	150Ω,±5%,1/4W	
R119	CF,(ARD25T102J)	1kΩ,±5%,1/4W	
R120	MF,(RN14K2E2001D)	2kΩ,±0.5%,1/4W	
R121	MF,(RN14K2E1331D)	1.33kΩ,±0.5%,1/4W	
R122	MF,(RN14K2E1331D)	1.33kΩ,±0.5%,1/4W	
R123	MF,(RN14K2E1331D)	1.33kΩ,±0.5%,1/4W	
R124	CM,var,(RJ-6P 500Ω)	500Ω,1/2W	
R125	CM,var,(RJ-6P 500Ω)	500Ω,1/2W	
R126	CM,var,(RJ-6P 500Ω)	500Ω,1/2W	
R127	CM,var,(RJ-6P 500Ω)	500Ω,1/2W	
R128	Not assigned		
R129	Not assigned		
R130	CF,(ARD25T222J)	2.2kΩ,±5%,1/4W	
R131	CF,(ARD25T331J)	330Ω,±5%,1/4W	
R132	Not assigned		
R133	CM,var,(RJ-6P 500Ω)	500Ω,1/2W	
R134	CM,var,(RJ-6P 500Ω)	500Ω,1/2W	
Z 1	XTAL OSC,(44X79277X)	22.368MHz	
Z 2	XTAL OSC,(44X79277AB)	25.248MHz	
Z 3	XTAL OSC,(44X79277W)	18.912MHz	
Z 4	XTAL OSC,(44X79277V)	18.528MHz	
Z 5	Delay line,(AT-10)		

( ): Manufacturer's part number
* : Selected at factory

44W88395 8/8

Parts List: A4 R-SWITCH (RECEIVER) **15**

CKT REF	DESCRIPTION	RATING	NOTE
J 1	Plug,(CNF23-34D-AA30S)		
S 1	Switch,(SLEP223D-F)		
S 2	Not assigned		
S 3	Not assigned		
S 4	Switch,(DIP-A(8))		
S 5	Switch,(DIP-A(8))		
S 6	Switch,(DIP-A(8))		

( ): Manufacturer's part number
* : Selected at factory

44W88394 1/1

Parts List : A8 PRINTER UNIT **16**

CKT REF	DESCRIPTION	RATING	NOTE
J 1	Connector, (DF1-5S-2.5R24)		
J 2	Connector, (DF1-5S-2.5R24)		
Z 1	PRINTER INTERFACE		44W85804
Z 2	PRINTER CONTROL		44W85805
Z 3	PRINTER, (FTP-020M008)		

( ): Manufacturer's part number
• : Selected at factory

44W85802 1/1

Parts List : Z1 in A8 PRINTER INTERFACE **17**

CKT REF	DESCRIPTION	RATING	NOTE
C 1	Elect,(CE04W1A471)	470μF,±20%,10V	
C 2	Elect,(CE04W1A471)	470μF,±20%,10V	
C 3	Elect,(CE04W1V101)	100μF,±20%,35V	
C 4	Cer,(CC924CH1H * J)	12 to 33pF,±5%,50V	•
C 5	Not assigned		
C 6	Not assigned		
C 7	Not assigned		
C 8	Cer,(CK924F1H104Z)	0.1μF,+80/-20%,50V	
C 9	Cer,(CK924C1H103M)	0.01μF,±20%,50V	
C10	Cer,(CK924C1H103M)	0.01μF,±20%,50V	
C11	Cer,(CK924F1H104Z)	0.1μF,+80/-20%,50V	
C12	Cer,(CK924F1H104Z)	0.1μF,+80/-20%,50V	
C13	Cer,(CK924F1H104Z)	0.1μF,+80/-20%,50V	
C14	Cer,(CK924F1H104Z)	0.1μF,+80/-20%,50V	
C15	Cer,(CK924F1H104Z)	0.1μF,+80/-20%,50V	
C16	Cer,(CK924F1H104Z)	0.1μF,+80/-20%,50V	
C17	Cer,(CK924F1H104Z)	0.1μF,+80/-20%,50V	
C18	Cer,(CK924F1H104Z)	0.1μF,+80/-20%,50V	
C19	Cer,(CK924F1H104Z)	0.1μF,+80/-20%,50V	
C20	Cer,(CK924F1H104Z)	0.1μF,+80/-20%,50V	
C21	Cer,(CC924CH1H * J)	12 to 33pF,±5%,50V	•
C22	Cer,(CK924F1H104Z)	0.1μF,+80/-20%,50V	
C23	Cer,(CK924F1H104Z)	0.1μF,+80/-20%,50V	
C24	Cer,(CK924F1H104Z)	0.1μF,+80/-20%,50V	
C25	Cer,(CK924F1H104Z)	0.1μF,+80/-20%,50V	
C26	Cer,(CK924F1H104Z)	0.1μF,+80/-20%,50V	
C27	Cer,(CK924F1H104Z)	0.1μF,+80/-20%,50V	
J 1	Connector, (HIF3-20P-2.54DS)	20P	
J 2	Connector, (FCN364J032)	32P	
J 3	Connector, (DF1-5P-2.5DSA)	5P	
J 4	Not assigned		
L 1	Coil,(LF8-101K)	100μH	
Q 1	IC,(74ALS574N)		
Q 2	IC,(74LS540)		
Q 3	IC,(74LS74A)		
Q 4	Not assigned		
Q 5	IC,(μPD8748D)		

( ): Manufacturer's part number
• : Selected at factory

M-1
44W85804 1/3

Parts List : Z1 in A8 PRINTER INTERFACE **17**

CKT REF	DESCRIPTION	RATING	NOTE
Q 6	IIC,(EPROM32X8-C)		
Q 7	IC,(74LS541)		
Q 8	IC,(μPD82C43C)		
Q 9	IC,(SN74ALS574N)		
Q10	IC,(M54563P)		
Q11	IC,(M54563P)		
Q12	IC,(μPC277C)		
Q13	IC,(74F537PC)		
Q14	Tr,(2SC1907)		
Q15	Tr,(2SD571)		
Q16	Tr,(2SB605)		
Q17	Tr,(2SD571)		
Q18	Tr,(2SB605)		
Q19	Tr,(2SC1907)		
Q20	Di,(1S953)		
Q21	Di,breakdown,(RD13E)	12.11 to 13.66V, 400mW	
Q22	IC,(TL7705CP-B)		
Q23	Tr,(2SD833)		
Q24	Tr,(2SD833)		
Q25	Tr,(2SD833)		
Q26	Tr,(2SD833)		
Q27	Tr,(2SD833)		
Q28	Tr,(2SD833)		
Q29	Tr,(2SD833)		
Q30	Tr,(2SD833)		
Q31	Tr,(2SD833)		
Q32	Tr,(2SD833)		
Q33	Not assigned		
Q34	Di,(μPA54H)		
Q35	Di,(μPA54H)		
Q36	Di,(1S953)		
Q37	Di,(1S953)		
Q38	Di,(1S953)		
Q39	Di,(1S953)		
Q40	Di,breakdown,(RD6.2EB)	5.78 to 6.44V,400mW	
R 1	CF,(ARD25T103J)	10kΩ,±5%,1/4W	
R 2	CF,(ARD25T103J)	10kΩ,±5%,1/4W	
R 3	CF,(ARD25T103J)	10kΩ,±5%,1/4W	
R 4	CF,(ARD25T102J)	1kΩ,±5%,1/4W	
R 5	CF,(ARD25T102J)	1kΩ,±5%,1/4W	
R 6	Not assigned		
R 7	Not assigned		

( ): Manufacturer's part number
• : Selected at factory

M-1
44W85804 2/3

Parts List : Z1 in A8 PRINTER INTERFACE **17**

CKT REF	DESCRIPTION	RATING	NOTE
R 8	CF,(ARD25T472J)	4.7kΩ,±5%,1/4W	
R 9	CF,(ARD25T472J)	4.7kΩ,±5%,1/4W	
R10	CF,(ARD25T223J)	22kΩ,±5%,1/4W	
R11	CF,(ARD25T181J)	180Ω,±5%,1/4W	
R12	CF,(ARD25T181J)	180Ω,±5%,1/4W	
R13	CF,(ARD25T183J)	18kΩ,±5%,1/4W	
R14	CF,(ARD25T472J)	4.7kΩ,±5%,1/4W	
R15	CF,(ARD25T123J)	12kΩ,±5%,1/4W	
R16	CF,(ARD25T223J)	22kΩ,±5%,1/4W	
R17	CF,(ARD25T511J)	510Ω,±5%,1/4W	
R18	CF,(ARD25T111J)	110Ω,±5%,1/4W	
R19	CF,(ARD25T223J)	22kΩ,±5%,1/4W	
R20	CF,(ARD25T221J)	220Ω,±5%,1/4W	
R21	CF,(ARD25T103J)	10kΩ,±5%,1/4W	
R22	CF,(ARD25T103J)	10kΩ,±5%,1/4W	
R23	CF,(ARD25T103J)	10kΩ,±5%,1/4W	
R24	CF,(ARD25T123J)	12kΩ,±5%,1/4W	
R25	CF,(ARD25T223J)	22kΩ,±5%,1/4W	
R26	CF,(ARD25T511J)	510Ω,±5%,1/4W	
R27	CF,(ARD25T111J)	110Ω,±5%,1/4W	
R28	CF,(ARD25T122J)	1.2kΩ,±5%,1/4W	
R29	CF,(ARD25T102J)	1kΩ,±5%,1/4W	
R30	Not assigned		
R31	CF,(ARD25T222J)	2.2kΩ,±5%,1/4W	
R32	CF,(ARD25T222J)	2.2kΩ,±5%,1/4W	
R33	CF,(ARD25T222J)	2.2kΩ,±5%,1/4W	
R34	CF,(ARD25T222J)	2.2kΩ,±5%,1/4W	
R35	CF,(ARD25T222J)	2.2kΩ,±5%,1/4W	
R36	CF,(ARD25T222J)	2.2kΩ,±5%,1/4W	
R37	CF,(ARD25T222J)	2.2kΩ,±5%,1/4W	
R38	CF,(ARD25T222J)	2.2kΩ,±5%,1/4W	
R39	CF,(ARD25T222J)	2.2kΩ,±5%,1/4W	
R40	CF,(ARD25T222J)	2.2kΩ,±5%,1/4W	
R41	CF,(ARD25T103J)	10kΩ,±5%,1/4W	
R42	CF,(ARD25T104J)	100kΩ,±5%,1/4W	
R43	CF,(ARD25T103J)	10kΩ,±5%,1/4W	
R44	MF,(RN14K2E1501D)	1.50kΩ,±0.5%,1/4W	
R45	Not assigned		
X 1	XTAL OSC,(TQC-208B)	6MHz	

( ): Manufacturer's part number
• : Selected at factory

M-1
44W85804 3/3

Parts List : Z2 in A8 PRINTER CONTROL **18**

CKT REF	DESCRIPTION	RATING	NOTE
J 1	Connector, (DF1-5P-2.5DSA)		
Q 1	LED, (TLG226)		
S 1	Switch, (HL20-NS)		
S 2	Switch, (HL20-NS)		

( ): Manufacturer's part number
* : Selected at factory

44W85805 1/1

Parts List : A6 (Option 42) GP-IB **8**

CKT REF	DESCRIPTION	RATING	NOTE
C 1	Elect, (CE02C1A470)	47μF, ±20%, 10V	
C 2	Cer, (CK924F1H104Z)	0.1μF, +80/-20%, 50V	
C 3	Cer, (CK924F1H104Z)	0.1μF, +80/-20%, 50V	
C 4	Cer, (CK924F1H104Z)	0.1μF, +80/-20%, 50V	
C 5	Cer, (CK924F1H104Z)	0.1μF, +80/-20%, 50V	
C 6	Cer, (CK924F1H104Z)	0.1μF, +80/-20%, 50V	
C 7	Cer, (CK924F1H104Z)	0.1μF, +80/-20%, 50V	
C 8	Cer, (CK924F1H104Z)	0.1μF, +80/-20%, 50V	
J 1	Pattern		
J 2	Connector, (57LE-20240-27C0-D35H)		
Q 1	IC, (75160A)		
Q 2	IC, (75162A)		
Q 3	IC, (μPD7210C)		
Q 4	IC, (74LS00)		
Q 5	IC, (74LS367A)		
Q 6	IC, (74LS240)		
Q 7	IC, (74LS74A)		
Q 8	IC, (74LS32)		
Q 9	IC, (74LS139)		
R 1	Single in-line array, (IHR-8-103JA)	10kΩ x 8, 1/8W	
S 1	Dip, (BP-8)		

( ): Manufacturer's part number
* : Selected at factory

44W83046 1/1

Parts List : A7 (Option 43) RS-232C **9**

CKT REF	DESCRIPTION	RATING	NOTE
C 1	Elect, (CE02C1A470)	47μF, ±20%, 10V	
C 2	Elect, (CE02C1C330)	33μF, ±20%, 16V	
C 3	Elect, (CE02C1C330)	33μF, ±20%, 16V	
C 4	Cer, (CC924CH1H151J)	150pF, ±5%, 50V	
C 5	Cer, (CK924F1H104Z)	0.1μF, +80/-20%, 50V	
C 6	Cer, (CK924F1H104Z)	0.1μF, +80/-20%, 50V	
C 7	Cer, (CK924F1H104Z)	0.1μF, +80/-20%, 50V	
C 8	Cer, (CK924F1H104Z)	0.1μF, +80/-20%, 50V	
C 9	Cer, (CK924F1H104Z)	0.1μF, +80/-20%, 50V	
C10	Cer, (CK924F1H104Z)	0.1μF, +80/-20%, 50V	
C11	Cer, (CK924F1H104Z)	0.1μF, +80/-20%, 50V	
C12	Cer, (CK924F1H104Z)	0.1μF, +80/-20%, 50V	
C13	Cer, (CK924F1H104Z)	0.1μF, +80/-20%, 50V	
J 1	Pattern		
J 2	Connector, (DB-25SA-J4)		
Q 1	IC, (SN75189AN)		
Q 2	IC, (74LS240)		
Q 3	IC, (SN75188N)		
Q 4	IC, (μPD8251AFC)		
Q 5	IC, (74LS04)		
Q 6	IC, (74LS367A)		
Q 7	IC, (COM8146)		
Q 8	IC, (74LS139)		
R 1	Single in-line array, (IHR-8-103JA)	10kΩ x 8, 1/8W	
R 2	Single in-line array, (IHR-4-103JA)	10kΩ x 4, 1/8W	
S 1	Dip, (S-2031)		
S 2	Dip, (B-8A)		
X 1	XTAL OSC, (NX-5068)	5.0688MHz	

( ): Manufacturer's part number
* : Selected at factory

44W83047 1/1

Parts List: A9 (Option 03) DS-1 OUTPUT **19**

CKT REF	DESCRIPTION	RATING	NOTE
C 1	Elect, (CE04C1C331A)	330μF, ±20%, 16V	
C 2	Cer, (CK924F1H104Z)	0.1μF, +80/-20%, 50V	
C 3	Cer, (CE04C1C331A)	330μF, ±20%, 16V	
C 4	Cer, (CK924F1H104Z)	0.1μF, +80/-20%, 50V	
C 5	Cer, (CK924F1H104Z)	0.1μF, +80/-20%, 50V	
C 6	Cer, (CK924F1H104Z)	0.1μF, +80/-20%, 50V	
C 7	Cer, (CK924F1H104Z)	0.1μF, +80/-20%, 50V	
C 8	Cer, (CK924C1H472M)	4700pF, ±20%, 50V	
C 9	Cer, (CK924F1H104Z)	0.1μF, +80/-20%, 50V	
C 10	Cer, (CK924F1H104Z)	0.1μF, +80/-20%, 50V	
C 11	Cer, (CK924F1H104Z)	0.1μF, +80/-20%, 50V	
C 12	Cer, (CK924F1H104Z)	0.1μF, +80/-20%, 50V	
C 13	Cer, (CK924F1H104Z)	0.1μF, +80/-20%, 50V	
C 14	Cer, (CK924F1H104Z)	0.1μF, +80/-20%, 50V	
C 15	Elect, (CE04C1C331A)	330μF, ±20%, 16V	
C 16	Cer, (CK924F1H104Z)	0.1μF, +80/-20%, 50V	
C 17	Not assigned		
J 1	Plug, (DF1-10P2.5DSA)	10pins	
J 2	Plug, (DF1-3P2.5DSA)	3pins	
J 3	Plug, (DF1-2P2.5DSA)	2pins	
L 1	Coil, (LF8-470K)	47μH, ±10%	
Q 1	IC, (74HCT00P)		
Q 2	IC, (74HC393)		
Q 3	IC, (74HC74)		
Q 4	IC, (74HC393)		
Q 5	IC, (74HC74)		
Q 6	IC, (MC4044)		
Q 7	Not assigned		
Q 8	IC, (74HC74)		
Q 9	IC, (MSM6903AS)		
Q 10	IC, (XR-T5670CP)		
Q 11	IC, (74LS38)		
Q 12	Tr, (2SC2901)		
Q 13	Tr, (2SC2901)		
Q 14	Tr, (2SC2901)		
Q 15	Di, (1S953)		
Q 16	Di, (1S953)		
Q 17	IC, (μPC14305H)		
R 1	CF, (ARD25T103J)	10kΩ, ±5%, 1/4W	
R 2	CF, (ARD25T102J)	1kΩ, ±5%, 1/4W	
R 3	CF, (ARD25T224J)	220kΩ, ±5%, 1/4W	

( ): Manufacturer's part number
* : Selected at factory

44W95156 1/2

Parts List: A9 (Option 03) DS-1 OUTPUT

19

CKT REF	DESCRIPTION	RATING		NOTE
R 4	CF,(ARD25T102J)	1kΩ,±5%,1/4W		
R 5	CF,(ARD25T391J)	390Ω,±5%,1/4W		
R 6	CF,(ARD25T102J)	1kΩ,±5%,1/4W		
R 7	CF,(ARD25T391J)	390Ω,±5%,1/4W		
R 8	CF,(ARD25T102J)	1kΩ,±5%,1/4W		
R 9	CF,(ARD25T331J)	330Ω,±5%,1/4W		
R 10	CF,(ARD25T102J)	1kΩ,±5%,1/4W		
R 11	CF,(ARD25T271J)	270Ω,±5%,1/4W		
R 12	CF,(ARD25T222J)	2.2kΩ,±5%,1/4W		
R 13	CF,(ARD25T751J)	750Ω,±5%,1/4W		
R 14	CF,(ARD25T681J)	680Ω,±5%,1/4W		
R 15	CF,(ARD25T681J)	680Ω,±5%,1/4W		
R 16	CM,var,(RJ76P200Ω)	200Ω,1/2W		
R 17	CF,(ARD25T103J)	10kΩ,±5%,1/4W		
R 18	CF,(ARD25T100J)	10Ω,±5%,1/4W		
R 19	CF,(ARD25T100J)	10Ω,±5%,1/4W		
R 20	CF,(ARD25T221J)	220Ω,±5%,1/4W		
R 21	CF,(ARD25T221J)	22pΩ,±5%,1/4W		
T 1	Trans,(439T23519)			
Z 1	XTAL OSC,(VCX0-105G)	3.088MHz		

( ): Manufacturer's part number

* : Selected at factory

44W95156 2/2

Anritsu

ANRITSU CORPORATION
5-10-27, Minamiazabu, Minato-ku, Tokyo, 106 Japan
PHONE. 03-3446-1111
TELEX J 34372 ANRITU

www.manualsplus.com
1030469

92973